# EQUIPMENT STRUCTURE DRAWING

| REFERENCE | |
|---|---|
| REFERENCE. TITLE | REFERENCE. No. |
| | |
| | |
| | |
| | |

NOTES

LEGEND

KEY PLAN

| REV. | DATE | DESCRIPTION | DESIGN | DRAWN | CHECKED | APPROVED |
|---|---|---|---|---|---|---|
| 03 | 05/2026 | ACC TO COMMENT | A.SH | A.B | R.KH | M.DA |
| 02 | 04/2026 | ACC TO COMMENT | A.SH | A.B | R.KH | M.DA |
| 01 | 02/2026 | ACC TO COMMENT | A.SH | A.B | R.KH | M.DA |
| 00 | 01/2026 | ISSUE FOR REVIEW | A.SH | A.B | R.KH | M.DA |

Client:

Consultant: Monento Iran

Contractor: MOHAM SHARGH CO.

Sub Contractor:

Project: 160MW Solar Power Plant (SARI HISHME )

Title: EQUIPMENT STRUCTURE DRAWING

| DOC NO.: | COVER SHEET 28P2-B-SMG-DWC-SUS-000000-CV-122 | REV. 03 |
|---|---|---|

| SCALE | SIZE | SHEET | FORMAT |
|---|---|---|---|
| | | OF 31 | DWG |

| | INDEX | REV | | | |
|---|---|---|---|---|---|
| NO. SHEET | SUBJECT | Z | A | B | C |
| 1 | COVER SHEET | | | | √ |
| 2 | INDEX | | | | √ |
| 3 | EQUIPMENT STRUCTURE LOCATION | | | | √ |
| 4 | DRAWING OF EQUIPMENT STRUCTURE 2SLA1 | | | | √ |
| 5 | DRAWING OF EQUIPMENT STRUCTURE 2SLA2 | | | | √ |
| 6 | DRAWING OF EQUIPMENT STRUCTURE 2SPI1 | | | | √ |
| 7 | DRAWING OF EQUIPMENT STRUCTURE 2SPI2 | | | | √ |
| 8 | DRAWING OF EQUIPMENT STRUCTURE 2SPI3 | | | | √ |
| 9 | DRAWING OF EQUIPMENT STRUCTURE 2SCVT1 | | | | √ |
| 10 | DRAWING OF EQUIPMENT STRUCTURE 2SCVT1 | | | | √ |
| 11 | DRAWING OF EQUIPMENT STRUCTURE 2SCVT2 | | | | √ |
| 12 | DRAWING OF EQUIPMENT STRUCTURE 2SCVT2 | | | | √ |
| 13 | DRAWING OF EQUIPMENT STRUCTURE 2SCT | | | | √ |
| 14 | DRAWING OF EQUIPMENT STRUCTURE 2SCT | | | | √ |
| 15 | DRAWING OF EQUIPMENT STRUCTURE 2SDS1 | | | | √ |
| 16 | DRAWING OF EQUIPMENT STRUCTURE 2SDS1 | | | | √ |
| 17 | DRAWING OF EQUIPMENT STRUCTURE 2SDS1 | | | | √ |
| 18 | DRAWING OF EQUIPMENT STRUCTURE 2SDS2 | | | | √ |
| 19 | DRAWING OF EQUIPMENT STRUCTURE 2SDS2 | | | | √ |
| 20 | DRAWING OF EQUIPMENT STRUCTURE 2SDS2 | | | | √ |
| 21 | DRAWING OF EQUIPMENT STRUCTURE 2SDSER | | | | √ |
| 22 | DRAWING OF EQUIPMENT STRUCTURE 2SDSER | | | | √ |
| 23 | DRAWING OF EQUIPMENT STRUCTURE 2SDSER | | | | √ |
| 24 | DRAWING OF EQUIPMENT STRUCTURE 2SDSER | | | | √ |
| 25 | DRAWING OF EQUIPMENT STRUCTURE 2SDSEL | | | | √ |
| 26 | DRAWING OF EQUIPMENT STRUCTURE 2SDSEL | | | | √ |
| 27 | DRAWING OF EQUIPMENT STRUCTURE 2SDSEL | | | | √ |
| 28 | DRAWING OF EQUIPMENT STRUCTURE 2SDSEL | | | | √ |
| 29 | DRAWING OF EQUIPMENT STRUCTURE 2SNCT | | | | √ |
| 30 | DRAWING OF EQUIPMENT STRUCTURE 33SNCT | | | | √ |
| 31 | DRAWING OF EQUIPMENT STRUCTURE 33SNCT | | | | √ |

REFERENCE

| REFERENCE. TITLE | REFERENCE. No. |
|---|---|
| | |
| | |
| | |
| | |

NOTES

LEGEND

KEY PLAN

| REV | DATE | DESCRIPTION | DESIGN | DRAWN | CHECKED | APPROVED |
|---|---|---|---|---|---|---|
| 03 | 05/2026 | ACC TO COMMENT | A.SH | A.B | R.KH | M.DA |
| 02 | 04/2026 | ACC TO COMMENT | A.SH | A.B | R.KH | M.DA |
| 01 | 02/2026 | ACC TO COMMENT | A.SH | A.B | R.KH | M.DA |
| 00 | 01/2026 | ISSUE FOR REVIEW | A.SH | A.B | R.KH | M.DA |

Client:

Consultant: Monenco Iran

Contractor: MOHAM SHARGH CO.

Sub Contractor:

Project: 100MW Solar Power Plant (SARCHESHME)

Title: EQUIPMENT STRUCTURE DRAWING

| DOC NO.: | INDEX 28P2-B-3MC-DWC-SUS-000000-CV-122 | REV. 03 |
|---|---|---|
| SCALE | SIZE | SHEET OF 31 | FORMAT DWG |

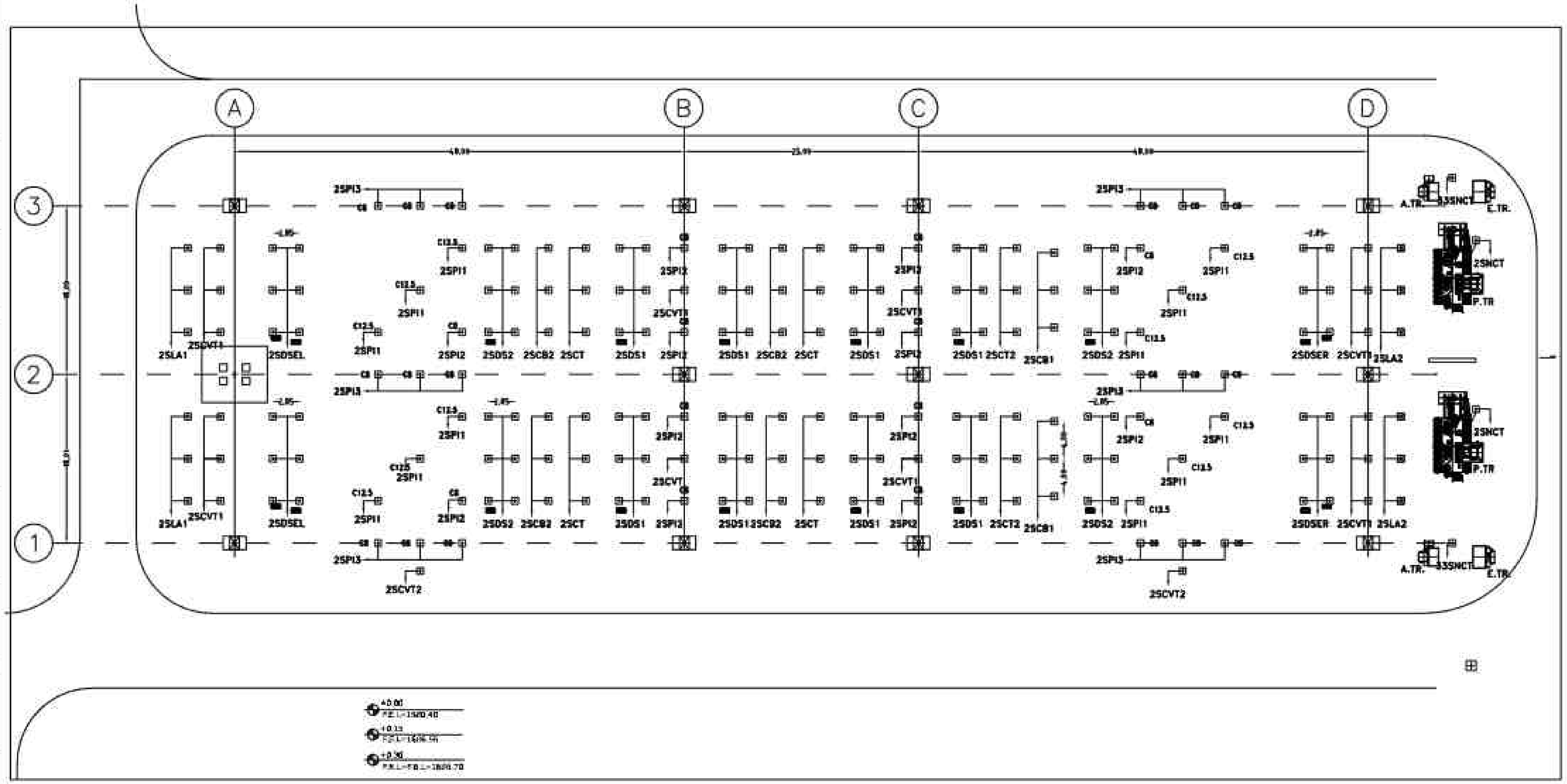


2SCB1 NO: 6
2SCB2 NO: 12

## REFERENCE

| REFERENCE. TITLE | REFERENCE. No. |
|---|---|
| | |
| | |
| | |
| | |

## NOTES

1-ALL DIMENSIONS AND LEVELS ARE IN "m"
2-THIS DOCUMENT HAS BEEN DESIGNED ACCORDING TO REV 00 OF LAYOUT.
3-ROAD & CABLE CHANNEL & DRAIN & CONTROL BUILDING MUST BE IN ACCOUNCE WITH THE RELEVANTE DOCUMENTS.

N.G.L : NATURAL GROUND LEVEL
F.E.L : FINISHED EARTH LEVEL
F.G.L : FINISHED GRAVEL LEVEL
F.B.L : FINISHED BLOCK LEVEL
F.R.L : FINISHED ROAD LEVEL

## LEGEND

EQUIPMENT STRUCTURE

## KEY PLAN

| REV. | DATE | DESCRIPTION | DESIGN | DRAWN | CHECKED | APPROVED |
|---|---|---|---|---|---|---|
| 03 | 05/2026 | ACC TO COMMENT | A.SH | A.B | R.KH | M.DA |
| 02 | 04/2026 | ACC TO COMMENT | A.SH | A.B | R.KH | M.DA |
| 01 | 02/2026 | ACC TO COMMENT | A.SH | A.B | R.KH | M.DA |
| 00 | 01/2026 | ISSUE FOR REVIEW | A.SH | A.B | R.KH | M.DA |

Client:

Consultant: Monenco Iran

Contractor: MOHAM SHARGH CO.

Sub Contractor

Project: 100MW Solar Power Plant (SARCHESHME)

Title: EQUIPMENT STRUCTURE DRAWING

EQUIPMENT STRUCTURE LOCATION

| DOC NO.: | 28P2-B-3MC-DWG-SUS-000000-CV-122 | REV. 03 |
|---|---|---|

| SCALE | SIZE | SHEET | FORMAT |
|---|---|---|---|
| | | 03 OF 31 | DWG |

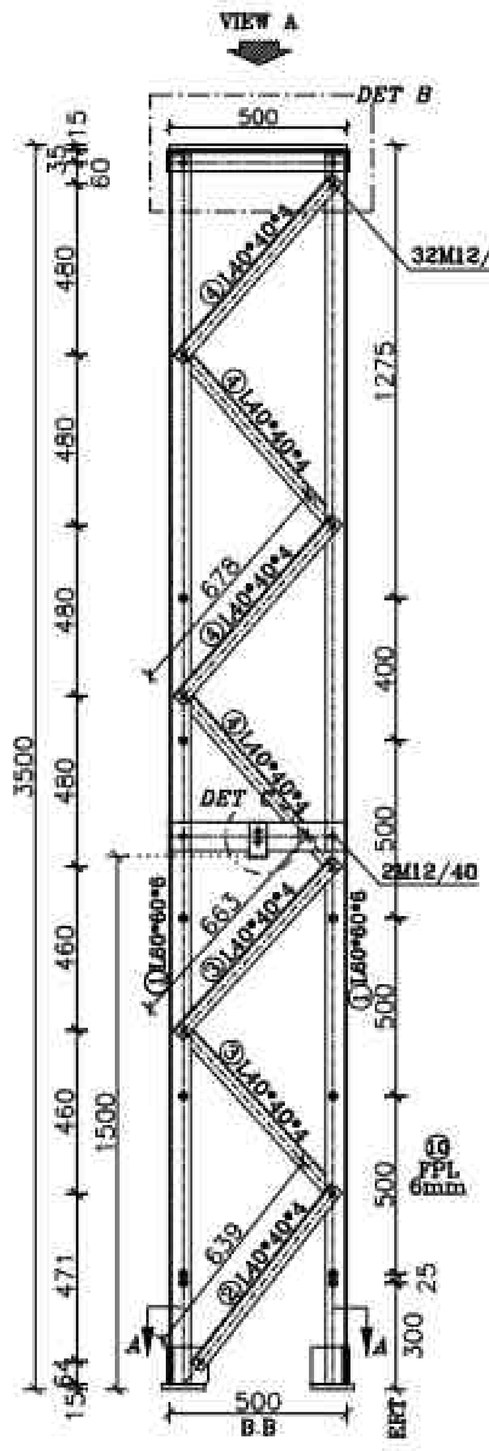


SUPPORT 2SLA

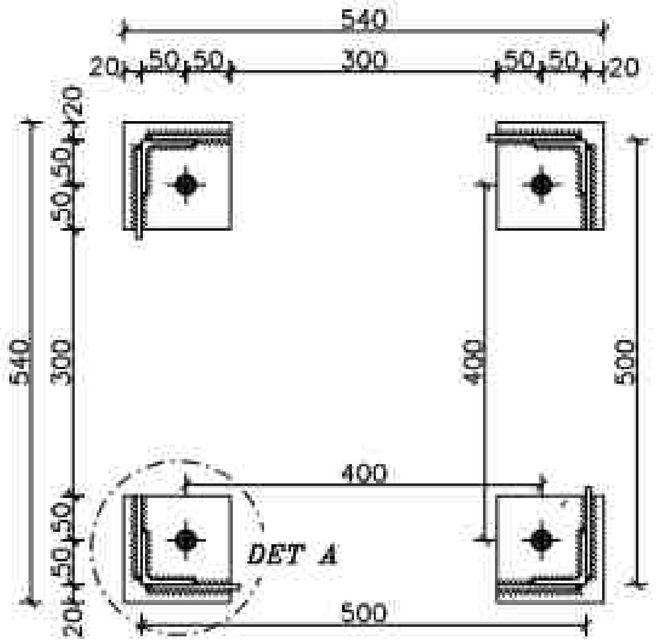


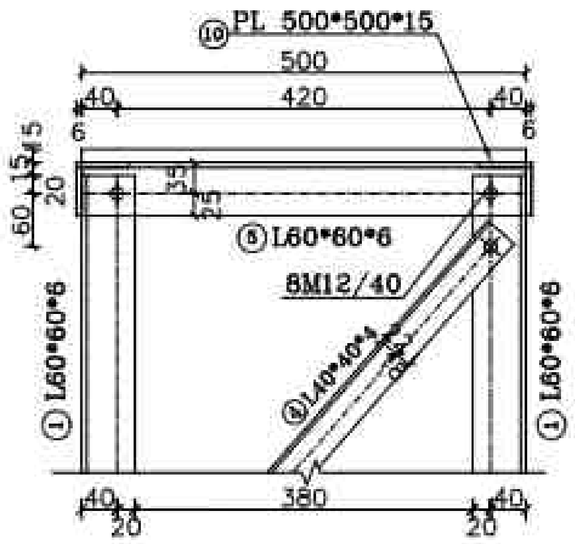


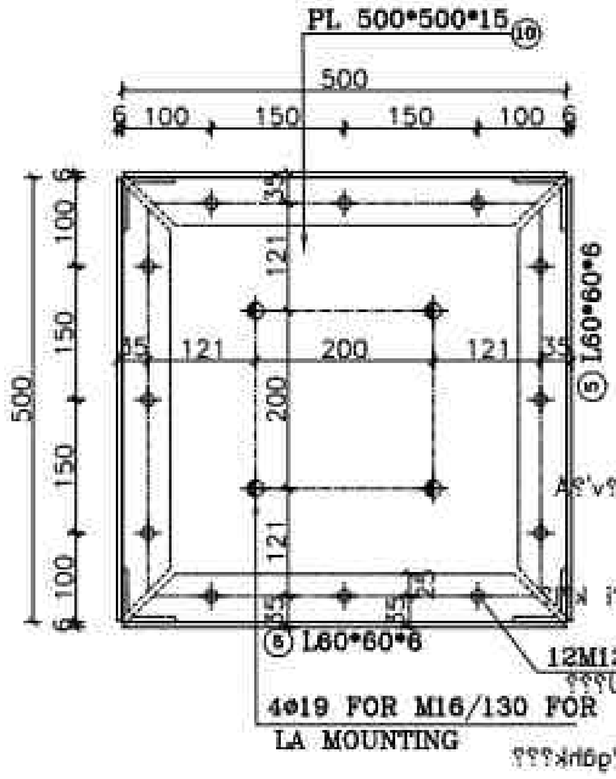


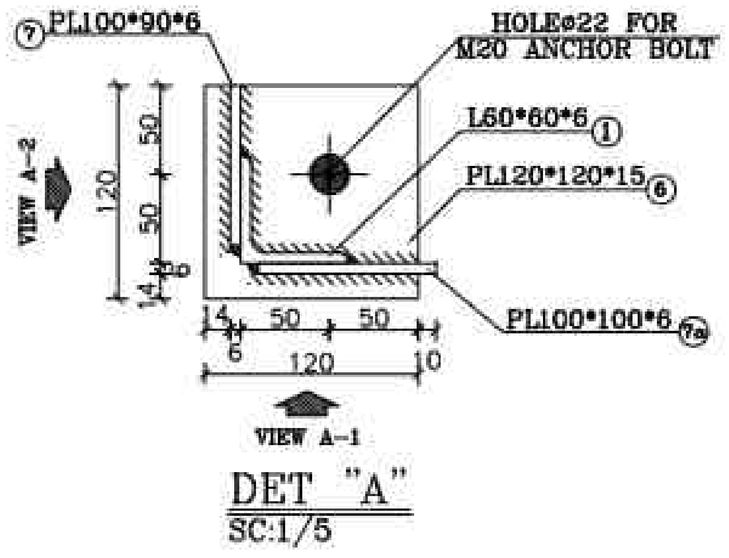


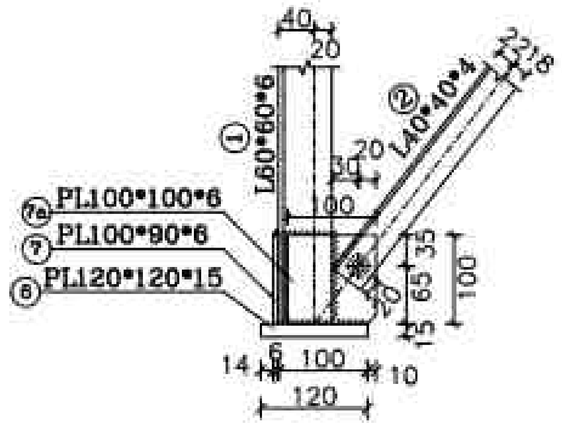


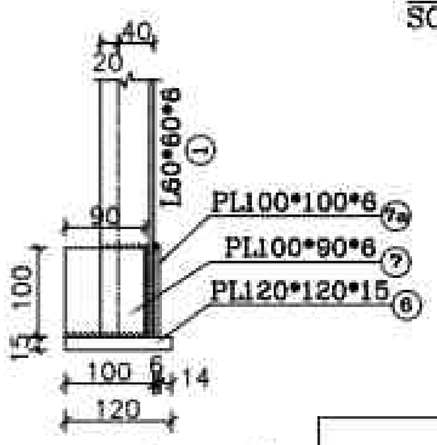


## BOLT LIST

| SIZE | QUANTITY) | SET | TOTAL |
|---|---|---|---|
| M12/40 | 44 | 6 | 264 |
| M12/50 | 12 | 6 | 72 |

## BOLT LIST EQUIPMNT

| SIZE | QUANTITY) | SET | TOTAL |
|---|---|---|---|
| M16/130 | 4 | 6 | 24 |
| M12/40 | 1 | 6 | 6 |

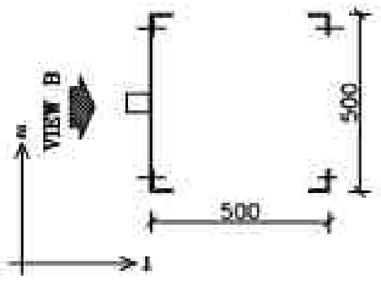


PLAN OF LEGS THAT SHOULD BE PUNCHED FOR EARTHING HOLES

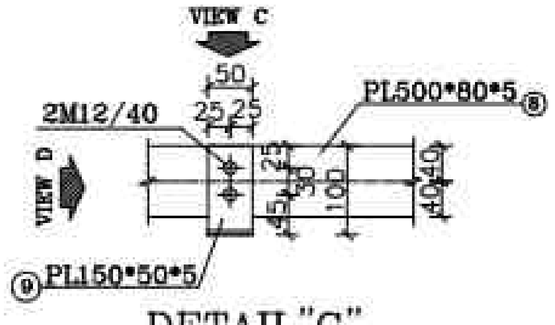


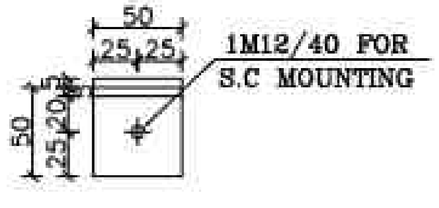


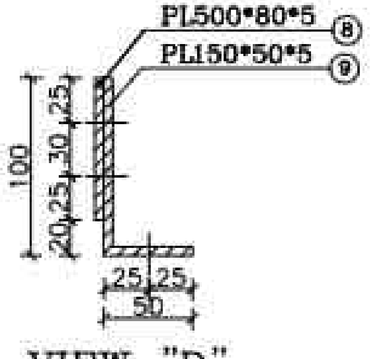


## LISTOFFER STRUCTURE

| POS | SIZE (mm) | Length (m) | QTY PCS | Weight(kg) kg/m | Piece | Total |
|---|---|---|---|---|---|---|
| 1 | L 60*60*6 | 3.455 | 4 | 5.42 | 18.73 | 74.90 |
| 2 | L 40*40*4 | 0.639 | 4 | 2.42 | 1.55 | 6.19 |
| 3 | L 40*40*4 | 0.663 | 8 | 2.42 | 1.60 | 12.84 |
| 4 | L 40*40*4 | 0.678 | 16 | 2.42 | 1.64 | 26.25 |
| 5 | L 60*60*6 | 0.500 | 4 | 5.42 | 2.71 | 10.84 |
| 6 | PL: 120*120*15 | ------ | 4 | ------ | 1.696 | 6.78 |
| 7 | PL: 100*90*6 | ------ | 4 | ------ | 0.423 | 1.692 |
| 7a | PL: 100*100*6 | ------ | 4 | ------ | 0.471 | 1.884 |
| 8 | PL: 500*80*5 | ------ | 1 | ------ | 1.570 | 1.570 |
| 9 | PL: 150*50*5 | ------ | 1 | ------ | 0.294 | 0.294 |
| 10 | PL: 500*500*15 | ------ | 1 | ------ | 29.430 | 29.430 |
| 11 | FPL: 40*40*6 | ------ | 4 | ------ | 0.075 | 0.30 |
| ST-37-2(DIN 17100) | | Total Weight/For Structure | | | 172.97 | |
| SET SITE | | | 6 | | | |
| HOT DIP GALVANIZED | | Total Weight/For project | | | 1,037.83 | |

این جدول فهرست مصالح و آهن آلات بوده و جنبه تعریفی ندارد و مواردی که در لیست نیست بعهده توسط سازنده کنترل شود

## REFERENCE

| REFERENCE. TITLE | REFERENCE. No. |
|---|---|
| | |
| | |
| | |
| | |

## NOTES

1- STEEL: ST-37
2-ALL BOLTS ARE GRADE: (8.8)
3- • 12 HOLES (○) • 22 HOLES (⊕)
• 13 HOLES (⊖) • 24 HOLES (⊕)
• 14 HOLES (⊕) • 28 HOLES (⊕)
• 15 HOLES (⊙) • 30 HOLES (⊕)
• 18 HOLES (⊕) • 35 HOLES (⊕)
MECHANISM AXES (⊕)
4- EARTHING HOLES (✱)
(ALL THE HOLES ARE ⌀14 EXCEPT AS SHOWN)
5- FOR ALL WELDS "D"=6mm EXECEPT AS SHOWN. D

## KEY PLAN

| REV. | DATE | DESCRIPTION | DESIGN | DRAWN | CHECKED | APPROVED |
|---|---|---|---|---|---|---|
| 03 | 05/2026 | ACC TO COMMENT | A.SH | A.B | R.KH | M.DA |
| 02 | 04/2026 | ACC TO COMMENT | A.SH | A.B | R.KH | M.DA |
| 01 | 02/2026 | ACC TO COMMENT | A.SH | A.B | R.KH | M.DA |
| 00 | 01/2026 | ISSUE FOR REVIEW | A.SH | A.B | R.KH | M.DA |

Client:

Consultant: Moneco Iran

Contractor: MOHAM SHARGH CO.

Sub Contractor:

Project: 10MW Solar Power Plant (SAUCHESHIE)

Title: EQUIPMENT STRUCTURE DRAWING
DRAWING OF EQUIPMENT STRUCTURE 2SLA1

| DOC NO.: | 28P2-B-3MG-DWG-SUS-000000-CV-122 | REV. 03 |
|---|---|---|

| SCALE | SIZE | SHEET | FORMAT |
|---|---|---|---|
| | | 04 OF 31 | DWG |

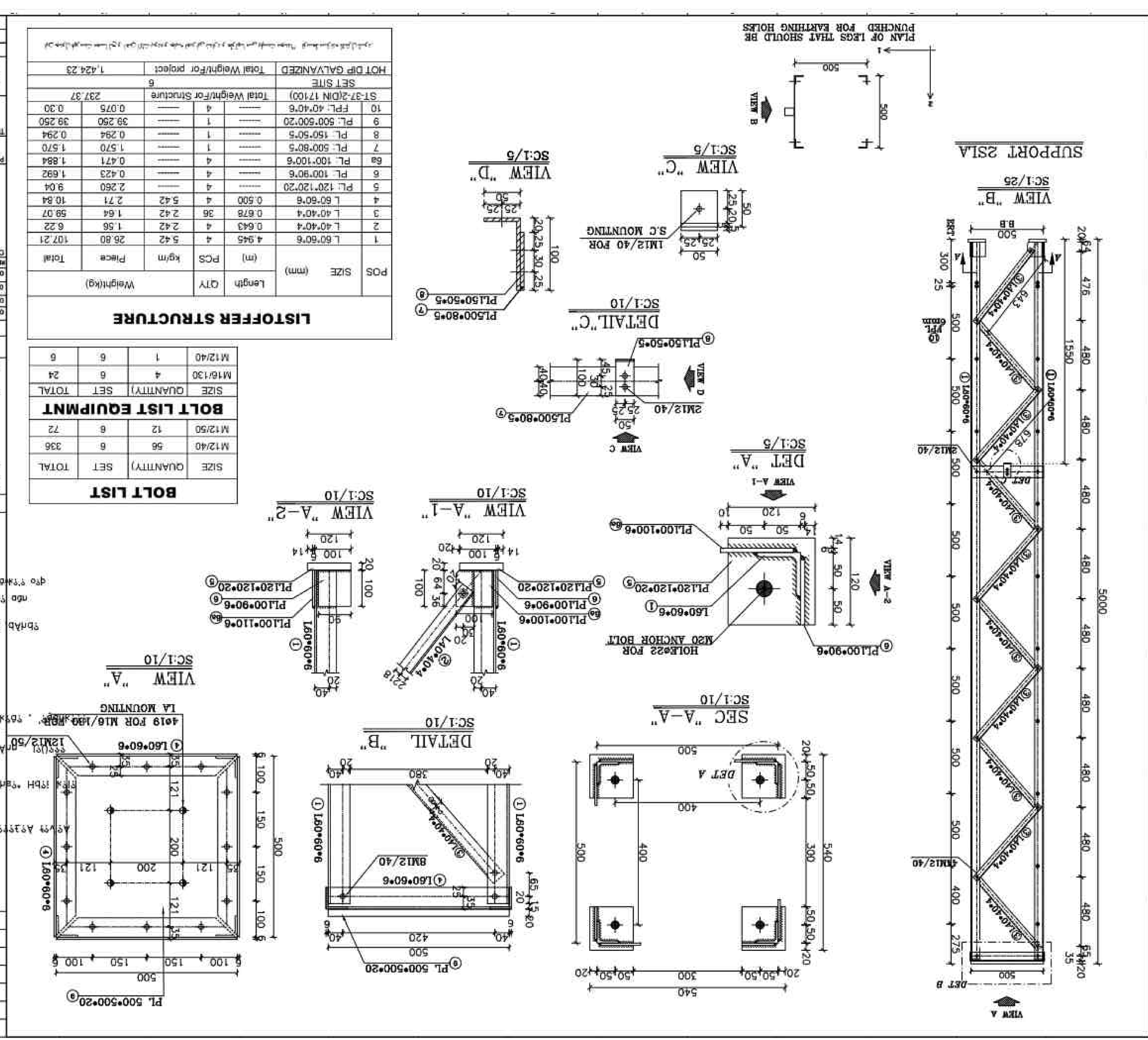
SUPPORT 2S1A
VIEW "B"
SC:1/25
VIEW "C"
SC:1/5
VIEW "D"
SC:1/5
PLAN OF LEGS THAT SHOULD BE PUNCHED FOR EARTHING HOLES
DET "A"
SC:1/5
DETAIL "C"
SC:1/10
VIEW A-1
VIEW A-2
VIEW A
VIEW C
VIEW D
VIEW "A-1"
SC:1/10
VIEW "A-2"
SC:1/10
SEC "A-A"
SC:1/10
DETAIL "B"
SC:1/10
VIEW "A"
SC:1/10
PL 500*500*20
IA MOUNTING
4Ø19 FOR M16/140 MBR.
12M12/50
L60*60*6
8M12/40
PL500*80*5
PL150*50*5
PL100*100*6
PL100*90*6
PL120*120*20
PL100*110*6
HOLE*22 FOR M20 ANCHOR BOLT
L60*60*6
L60*60*6
L60*60*6

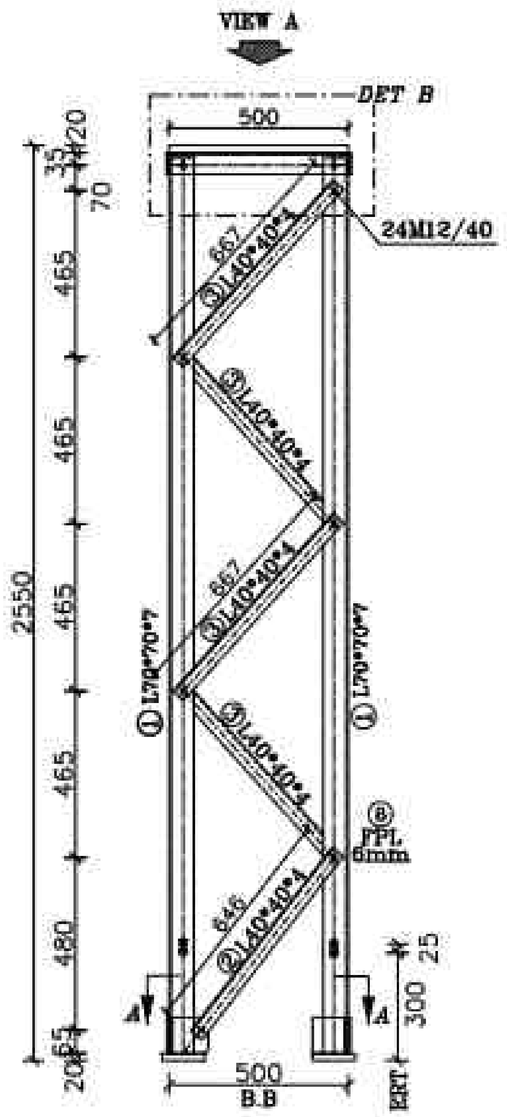


VIEW "B"
SC:1/25

SUPPORT 2SP1

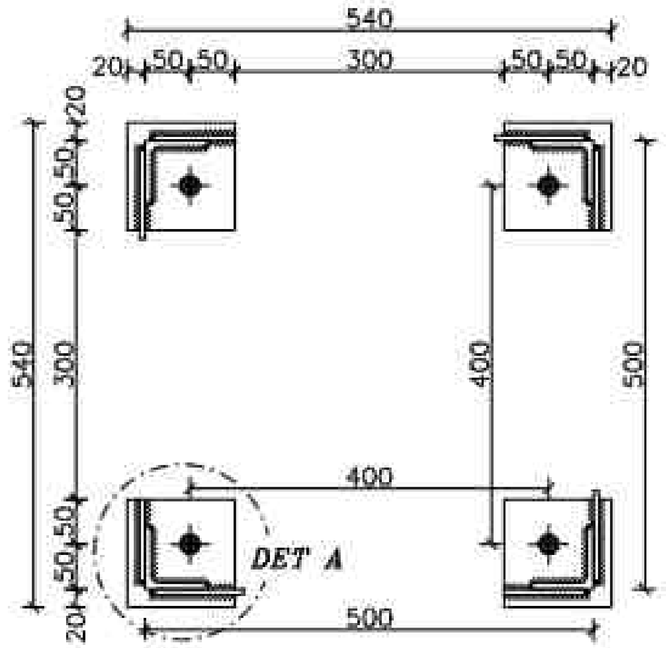


SEC "A–A"
SC:1/10

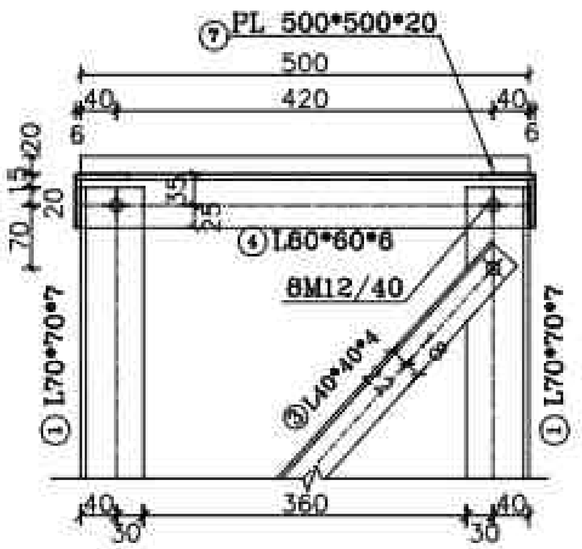


DETAIL "B"
SC:1/10

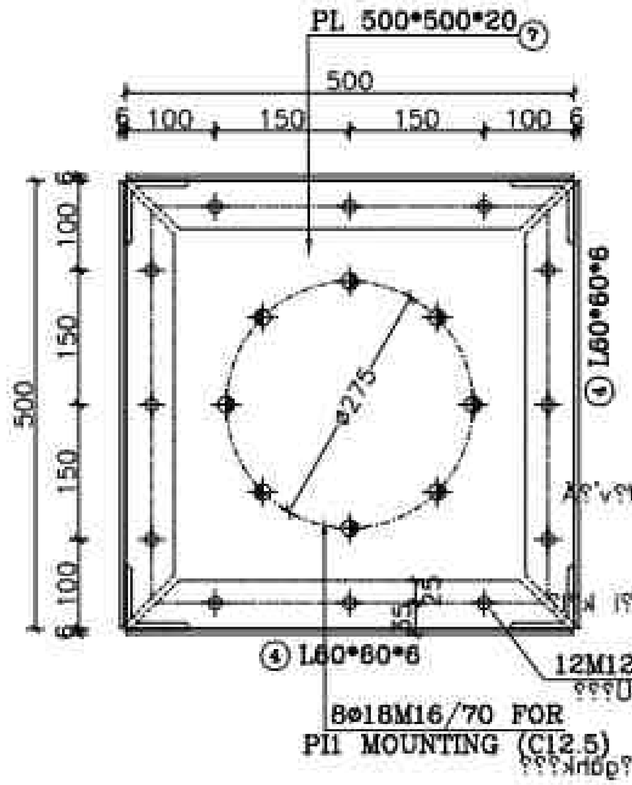


VIEW "A"
SC:1/10

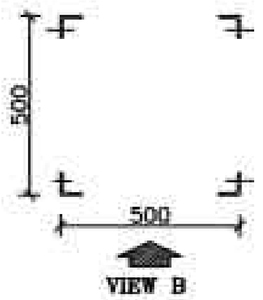


PLAN OF LEGS THAT SHOULD BE PUNCHED FOR EARTHING HOLES

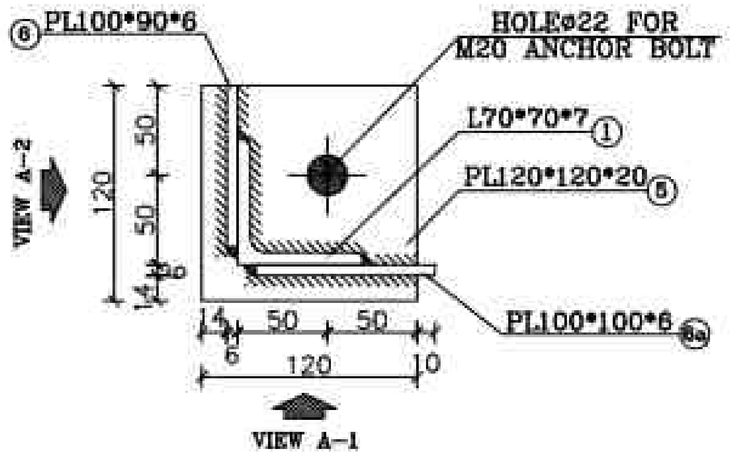


DET "A"
SC:1/5

## BOLT LIST

| SIZE | QUANTITY) | SET | TOTAL |
|---|---|---|---|
| M12/40 | 24 | 12 | 288 |
| M16/40 | 8 | 12 | 96 |
| M12/50 | 12 | 12 | 144 |

## BOLT LIST EQUIPMNT

| SIZE | QUANTITY) | SET | TOTAL |
|---|---|---|---|
| M16/70 | 8 | 12 | 96 |

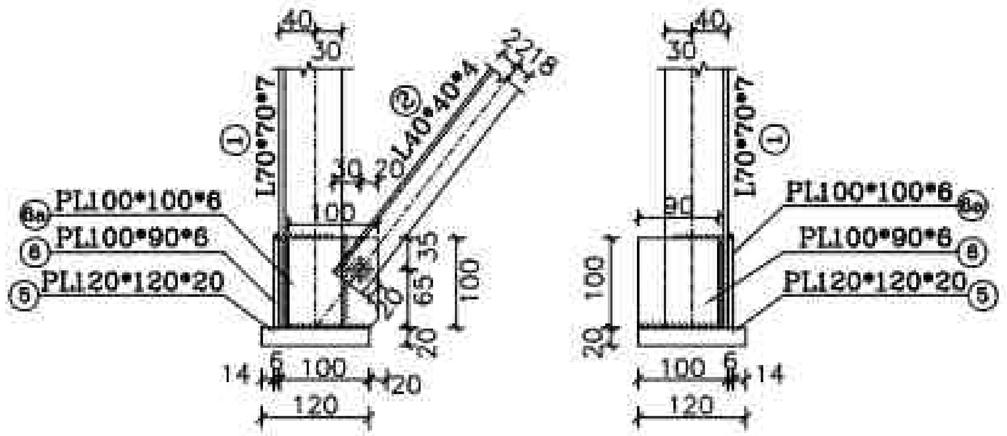


VIEW "A–1"
SC:1/10

VIEW "A–2"
SC:1/10

## LISTOFFER STRUCTURE

| POS | SIZE (mm) | Length (m) | QTY PCS | Weight(kg) kg/m | Piece | Total |
|---|---|---|---|---|---|---|
| 1 | L 70*70*7 | 2.595 | 4 | 7.38 | 19.15 | 76.60 |
| 2 | L 40*40*4 | 0.646 | 4 | 2.42 | 1.56 | 6.25 |
| 3 | L 40*40*4 | 0.667 | 16 | 2.42 | 1.61 | 25.83 |
| 4 | L 60*60*6 | 0.500 | 4 | 5.42 | 2.71 | 10.84 |
| 5 | PL: 120*120*20 | —— | 4 | —— | 2.260 | 9.04 |
| 6 | PL: 100*90*6 | —— | 4 | —— | 0.423 | 1.692 |
| 6a | PL: 100*100*6 | —— | 4 | —— | 0.471 | 1.884 |
| 7 | PL: 500*500*20 | —— | 1 | —— | 39.250 | 39.250 |
| 8 | FPL: 40*40*6 | —— | 4 | —— | 0.075 | 0.30 |
| ST-37-2(DIN 17100) | | Total Weight/For Structure | | | 171.69 | |
| SET SITE | | | 12 | | | |
| HOT DIP GALVANIZED | | Total Weight/For project | | | 2,060.30 | |

این جدول فهرست مصالح و اقلام آلات بوده و جنبه اجرایی ندارد و طولها می بایست مجدداً توسط سازنده کنترل شود

## REFERENCE

| REFERENCE. TITLE | REFERENCE. No. |
|---|---|
| | |
| | |
| | |
| | |

## NOTES

| (mm) | t>6mm | 3<t≤6mm | 1.5<t≤3mm |
|---|---|---|---|
| | 85 | 150 | |
| | 70 | 90 | |
| | 55 | 60 | |

## LEGEND

1– STEEL: ST–37
2–ALL BOLTS ARE GRADE: (8.8)
3– ● 12 HOLES (○) ● 22 HOLES (⊕)
● 13 HOLES (⊖) ● 24 HOLES (⊕)
● 14 HOLES (⊕) ● 26 HOLES (⊕)
● 15 HOLES (⊘) ● 30 HOLES (⊕)
● 18 HOLES (⊕) ● 35 HOLES (⊕)
MECHANISM AXES (⊕)
4– EARTHING HOLES (✱)
(ALL THE HOLES ARE ø14 EXCEPT AS SHOWN)
5– FOR ALL WELDS "D"=6mm EXCEPT AS SHOWN.

## KEY PLAN

| REV. | DATE | DESCRIPTION | DESIGN | DRAWN | CHECKED | APPROVED |
|---|---|---|---|---|---|---|
| 03 | 05/2026 | ACC TO COMMENT | A.SH | A.B | R.KH | M.DA |
| 02 | 04/2026 | ACC TO COMMENT | A.SH | A.B | R.KH | M.DA |
| 01 | 02/2026 | ACC TO COMMENT | A.SH | A.B | R.KH | M.DA |
| 00 | 01/2026 | ISSUE FOR REVIEW | A.SH | A.B | R.KH | M.DA |

Client:

Consultant: موننکو ایران Monenco Iran

Contractor: MOHAM SHARGH CO.

Sub Contractor:

Project: 100MW Solar Power Plant (SARCHESHME)

Title: EQUIPMENT STRUCTURE DRAWING
DRAWING OF EQUIPMENT STRUCTURE 2SPI1

| DOC NO.: | 28P2–B–3MG–DWG–SUS–000000–CV–122 | REV. 03 |
|---|---|---|

| SCALE | SIZE | SHEET | FORMAT |
|---|---|---|---|
| | | 06 OF 31 | DWG |

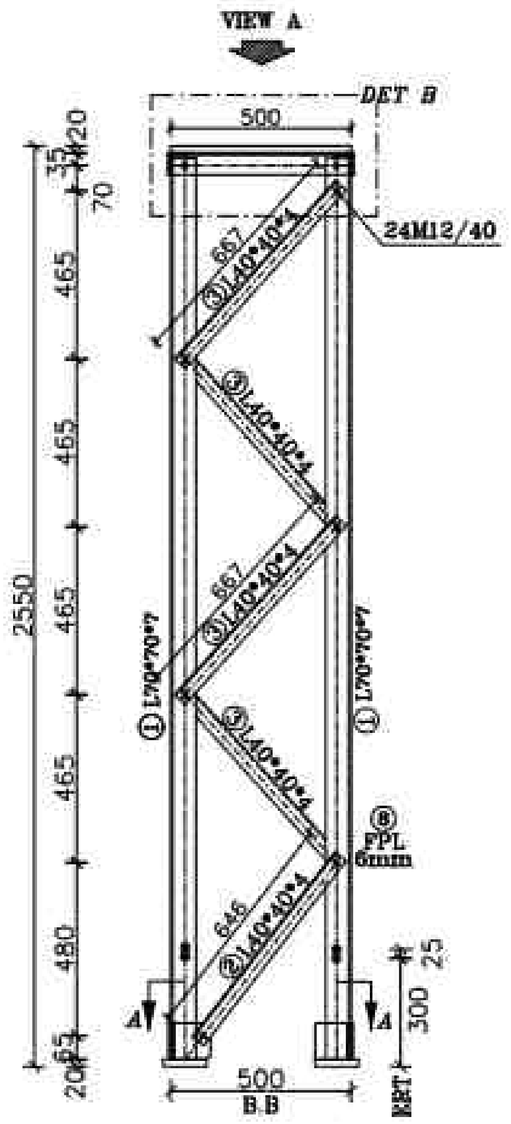


VIEW "B"
SC:1/25

SUPPORT 2SP2

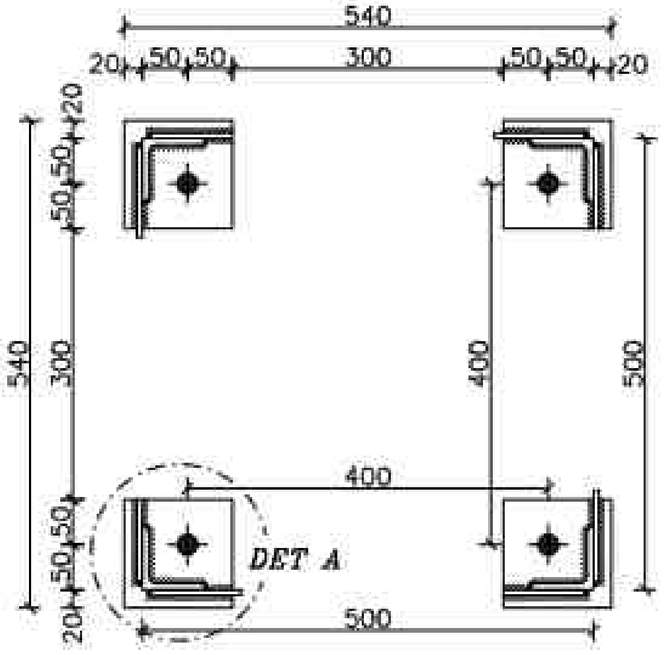


SEC "A–A"
SC:1/10

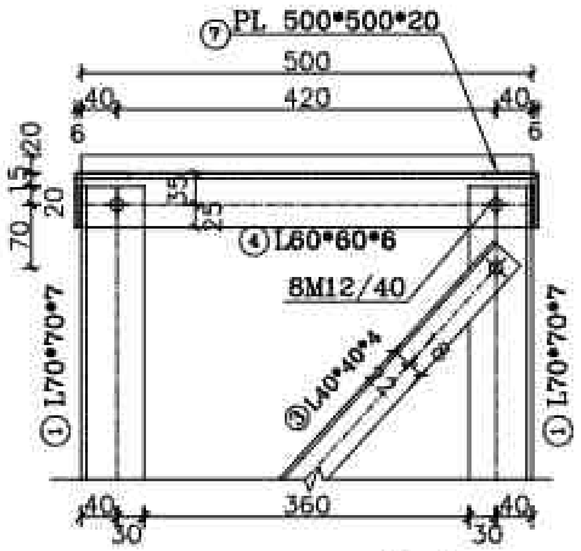


DETAIL "B"
SC:1/10

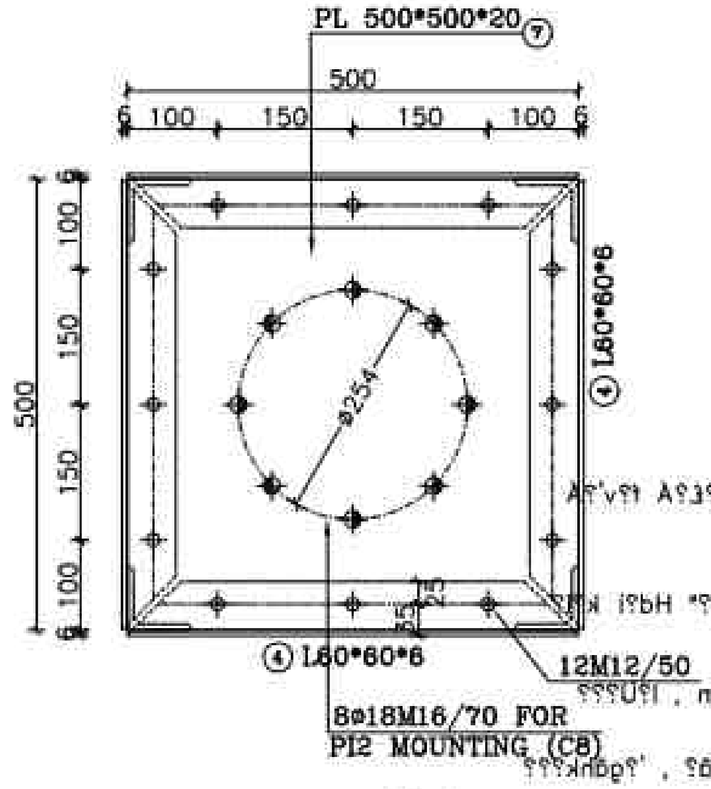


VIEW "A"
SC:1/10

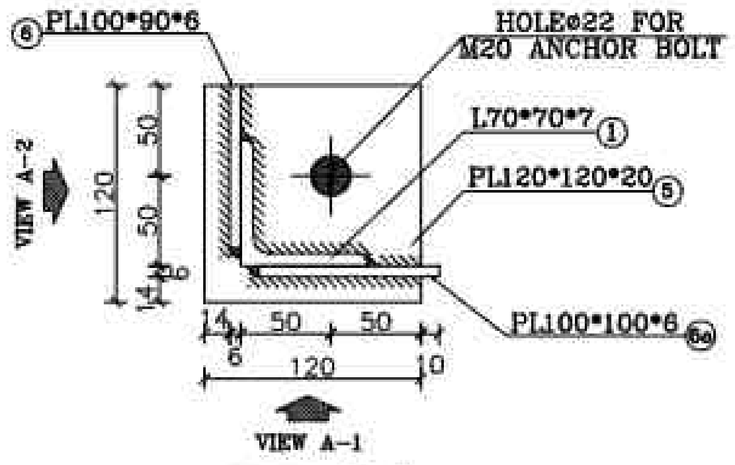


DET "A"
SC:1/5

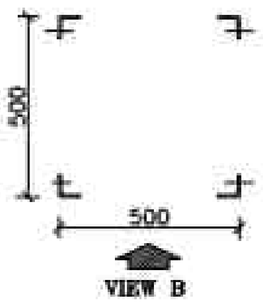


PLAN OF LEGS THAT SHOULD BE PUNCHED FOR EARTHING HOLES

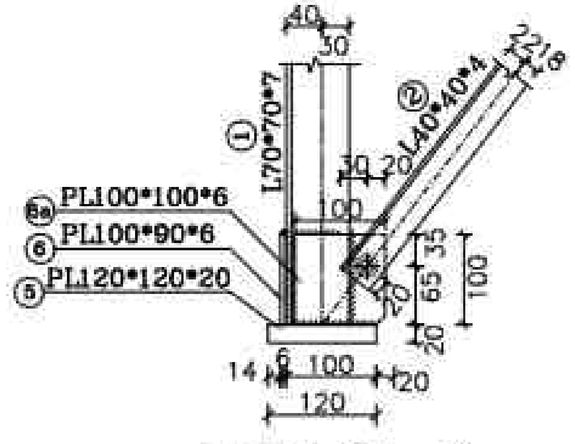


VIEW "A–1"
SC:1/10

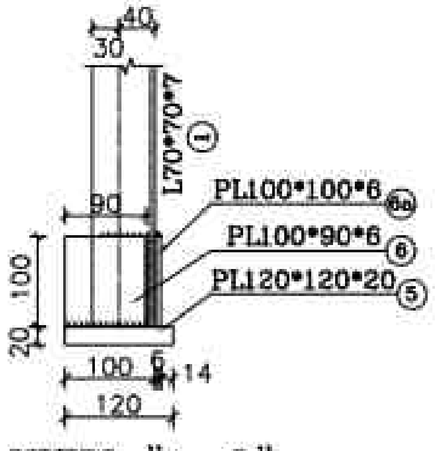


VIEW "A–2"
SC:1/10

## BOLT LIST

| SIZE | QUANTITY) | SET | TOTAL |
|---|---|---|---|
| M12/40 | 24 | 12 | 288 |
| M16/40 | 8 | 12 | 96 |
| M12/50 | 12 | 12 | 144 |

## BOLT LIST EQUIPMNT

| SIZE | QUANTITY) | SET | TOTAL |
|---|---|---|---|
| M16/70 | 8 | 12 | 96 |

## LISTOFFER STRUCTURE

| POS | SIZE (mm) | Length (m) | QTY PCS | Weight(kg) kg/m | Piece | Total |
|---|---|---|---|---|---|---|
| 1 | L 70*70*7 | 2.595 | 4 | 7.36 | 19.15 | 76.60 |
| 2 | L 40*40*4 | 0.646 | 4 | 2.42 | 1.56 | 6.25 |
| 3 | L 40*40*4 | 0.667 | 16 | 2.42 | 1.61 | 25.83 |
| 4 | L 60*60*6 | 0.500 | 4 | 5.42 | 2.71 | 10.84 |
| 5 | PL: 120*120*20 | ------ | 4 | ------ | 2.260 | 9.04 |
| 6 | PL: 100*90*6 | ------ | 4 | ------ | 0.423 | 1.692 |
| 6a | PL: 100*100*6 | ------ | 4 | ------ | 0.471 | 1.884 |
| 7 | PL: 500*500*20 | ------ | 1 | ------ | 39.250 | 39.250 |
| 8 | FPL: 40*40*6 | ------ | 4 | ------ | 0.075 | 0.30 |
| ST-37-2(DIN 17100) | | Total Weight/For Structure | | | 171.69 | |
| SET SITE | | 12 | | | | |
| HOT DIP GALVANIZED | | Total Weight/For project | | | 2,060.30 | |

این جدول فهرست حجم آلج و آهن آلات بوده و جنبه تعهدی ندارد و طولها می‌بایست مجدداً توسط سازنده کنترل شود.

## REFERENCE

| REFERENCE. TITLE | REFERENCE. No. |
|---|---|
| | |
| | |
| | |
| | |

## NOTES

ASTM A123.A153

| (mm) | (t) | |
|---|---|---|
| t>6mm | 85 | 150 |
| 3<t≤6mm | 70 | 90 |
| 1.5<t≤3mm | 55 | 80 |

## LEGEND

1– STEEL: ST–37
2–ALL BOLTS ARE GRADE: (8.8)
3– ● 12 HOLES (○) ● 22 HOLES (⊕)
● 13 HOLES (⊖) ● 24 HOLES (⊕)
● 14 HOLES (⊕) ● 28 HOLES (⊕)
● 15 HOLES (⊕) ● 30 HOLES (⊕)
● 18 HOLES (⊕) ● 35 HOLES (⊕)
MECHANISM AXES (⊕)
← EARTHING HOLES (✱)
(ALL THE HOLES ARE ø14 EXCEPT AS SHOWN)
5– FOR ALL WELDS "D"=6mm EXCEPT AS SHOWN. D

## KEY PLAN

| REV | DATE | DESCRIPTION | DESIGN | DRAWN | CHECKED | APPROVED |
|---|---|---|---|---|---|---|
| 03 | 05/2026 | ACC TO COMMENT | A.SH | A.B | R.KH | M.DA |
| 02 | 04/2026 | ACC TO COMMENT | A.SH | A.B | R.KH | M.DA |
| 01 | 02/2026 | ACC TO COMMENT | A.SH | A.B | R.KH | M.DA |
| 00 | 01/2026 | ISSUE FOR REVIEW | A.SH | A.B | R.KH | M.DA |

Client:

Consultant: Monenco Iran

Contractor: MOHAM SHARGH CO.

Sub Contractor:

Project: 100MW Solar Power Plant (SARCHESHME)

Title: EQUIPMENT STRUCTURE DRAWING
DRAWING OF EQUIPMENT STRUCTURE 2SPI2

| DOC NO.: | 28P2–B–3MG–DWG–SUS–000000–CV–122 | REV. 03 |
|---|---|---|

| SCALE | SIZE | SHEET | FORMAT |
|---|---|---|---|
| | | 07 OF 31 | DWG |

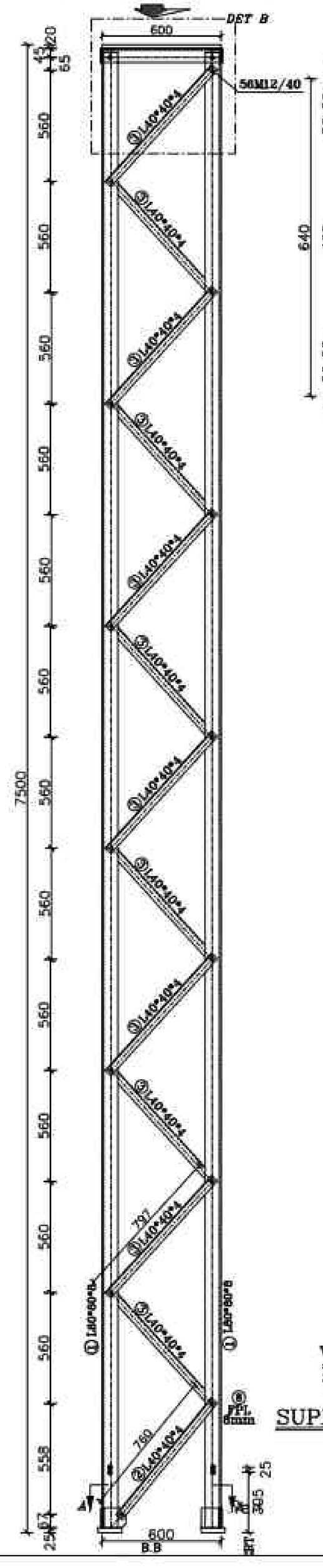


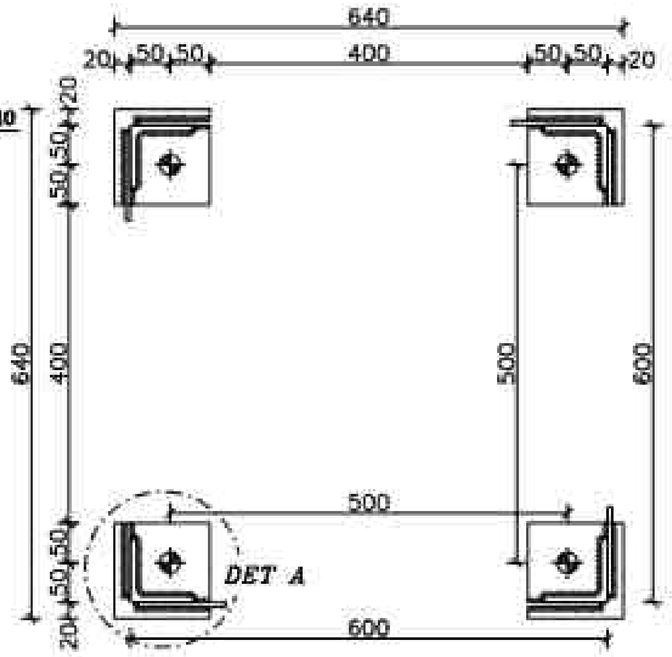


SEC "A–A"

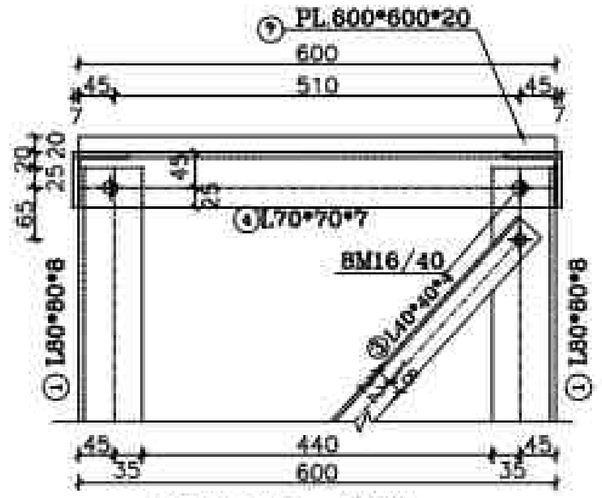


DETAIL "B"
SC:1/10

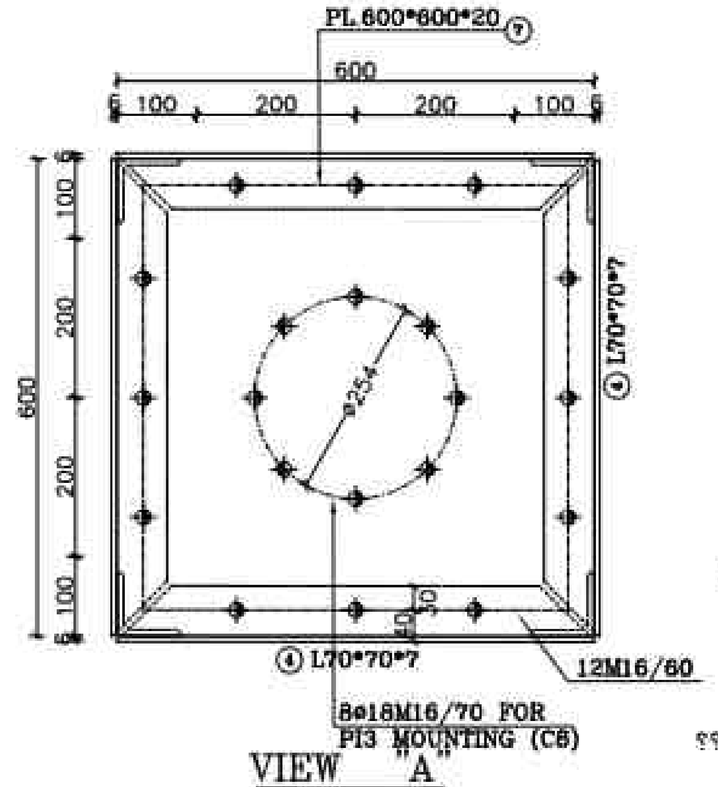


VIEW "A"
SC:1/10

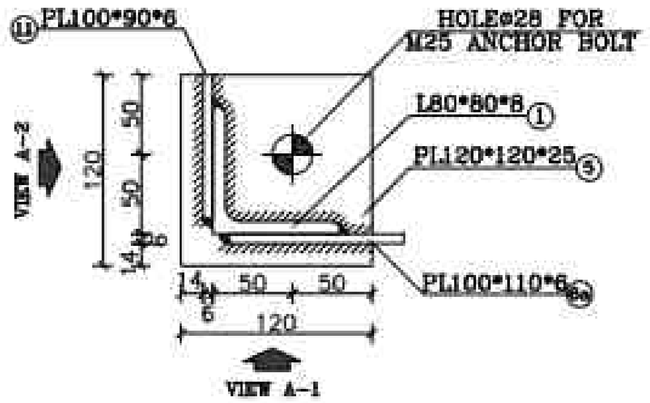


DET "A"
SC:1/5

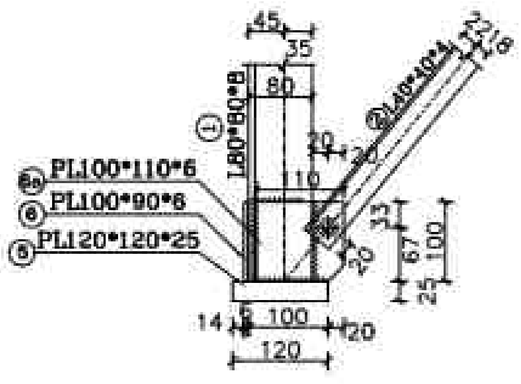


VIEW "A–1"
SC:1/10

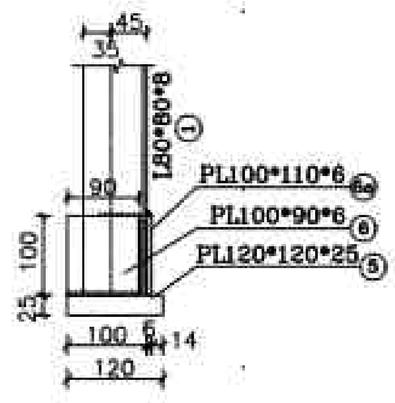


VIEW "A–2"
SC:1/10

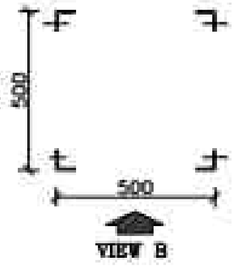


VIEW "B"
SC:1/25

SUPPORT 2SP3

PLAN OF LEGS THAT SHOULD BE PUNCHED FOR EARTHING HOLES

## BOLT LIST

| SIZE | QUANTITY) | SET | TOTAL |
|---|---|---|---|
| M12/40 | 56 | 18 | 1008 |
| M16/40 | 8 | 18 | 144 |
| M16/60 | 12 | 18 | 216 |

## BOLT LIST EQUIPMNT

| SIZE | QUANTITY) | SET | TOTAL |
|---|---|---|---|
| M16/70 | 8 | 18 | 144 |

## LISTOFFER STRUCTURE

| POS | SIZE (mm) | Length (m) | QTY PCS | Weight(kg) kg/m | Piece | Total |
|---|---|---|---|---|---|---|
| 1 | L 80*80*8 | 7.435 | 4 | 9.66 | 71.82 | 287.29 |
| 2 | L 40*40*4 | 0.760 | 4 | 2.42 | 1.84 | 7.36 |
| 3 | L 40*40*4 | 0.797 | 48 | 2.42 | 1.93 | 92.58 |
| 4 | L 70*70*7 | 0.600 | 4 | 7.38 | 4.43 | 17.71 |
| 5 | PL: 120*120*25 | —— | 4 | —— | 2.826 | 11.30 |
| 6 | PL: 100*90*6 | —— | 4 | —— | 0.423 | 1.692 |
| 6a | PL: 100*110*6 | —— | 4 | —— | 0.518 | 2.072 |
| 8 | PL: 600*600*20 | —— | 1 | —— | 56.520 | 56.520 |
| 9 | FPL: 40*40*8 | —— | 4 | —— | 0.100 | 0.40 |
| ST-37-2(DIN 17100) | | Total Weight/For Structure | | | | 476.92 |
| SET SITE | | | 18 | | | |
| HOT DIP GALVANIZED | | Total Weight/For project | | | | 8,584.64 |

این جدول فهرست مصالح و اجزای اتاک پوسته و جعبه اجرایی نبوده و طراحی می‌بایست تکمیل و توسط سازنده کنترل شود

## REFERENCE

| REFERENCE. TITLE | REFERENCE. No. |
|---|---|
| | |
| | |
| | |
| | |

## NOTES

1– STEEL: ST–37
2–ALL BOLTS ARE GRADE (8.8)
3– ø 12 HOLES ( ○ ) ø 22 HOLES ( ⊕ )
ø 13 HOLES ( ⊖ ) ø 24 HOLES ( ⊕ )
ø 14 HOLES ( ⊕ ) ø 28 HOLES ( ⊕ )
ø 15 HOLES ( ⊕ ) ø 30 HOLES ( ⊕ )
ø 18 HOLES ( ⊕ ) ø 35 HOLES ( ⊕ )
MECHANISM AXES ( ⊕ )
4– EARTHING HOLES ( ✱ )
(ALL THE HOLES ARE ø14 EXCEPT AS SHOWN)
5– FOR ALL WELDS "D"=6mm EXCEPT AS SHOWN. D

## LEGEND

## KEY PLAN

| REV. | DATE | DESCRIPTION | DESIGN | DRAWN | CHECKED | APPROVED |
|---|---|---|---|---|---|---|
| 03 | 05/2026 | ACC TO COMMENT | A.SH | A.B | R.KH | M.DA |
| 02 | 04/2026 | ACC TO COMMENT | A.SH | A.B | R.KH | M.DA |
| 01 | 02/2026 | ACC TO COMMENT | A.SH | A.B | R.KH | M.DA |
| 00 | 01/2026 | ISSUE FOR REVIEW | A.SH | A.B | R.KH | M.DA |

Client:

Consultant: موننکو ایران Monenco Iran

Contractor: MOHAM SHARGH CO.

Sub Contractor:

Project: 10000 Solar Power Plant (SARCHESME)

Title: EQUIPMENT STRUCTURE DRAWING
DRAWING OF EQUIPMENT STRUCTURE 2SP13

| DOC NO.: | 28P2–B–3MC–DWG–SUS–000000–CV–122 | REV. 03 |
|---|---|---|
| SCALE | SIZE | SHEET 08 OF 31 | FORMAT DWG |

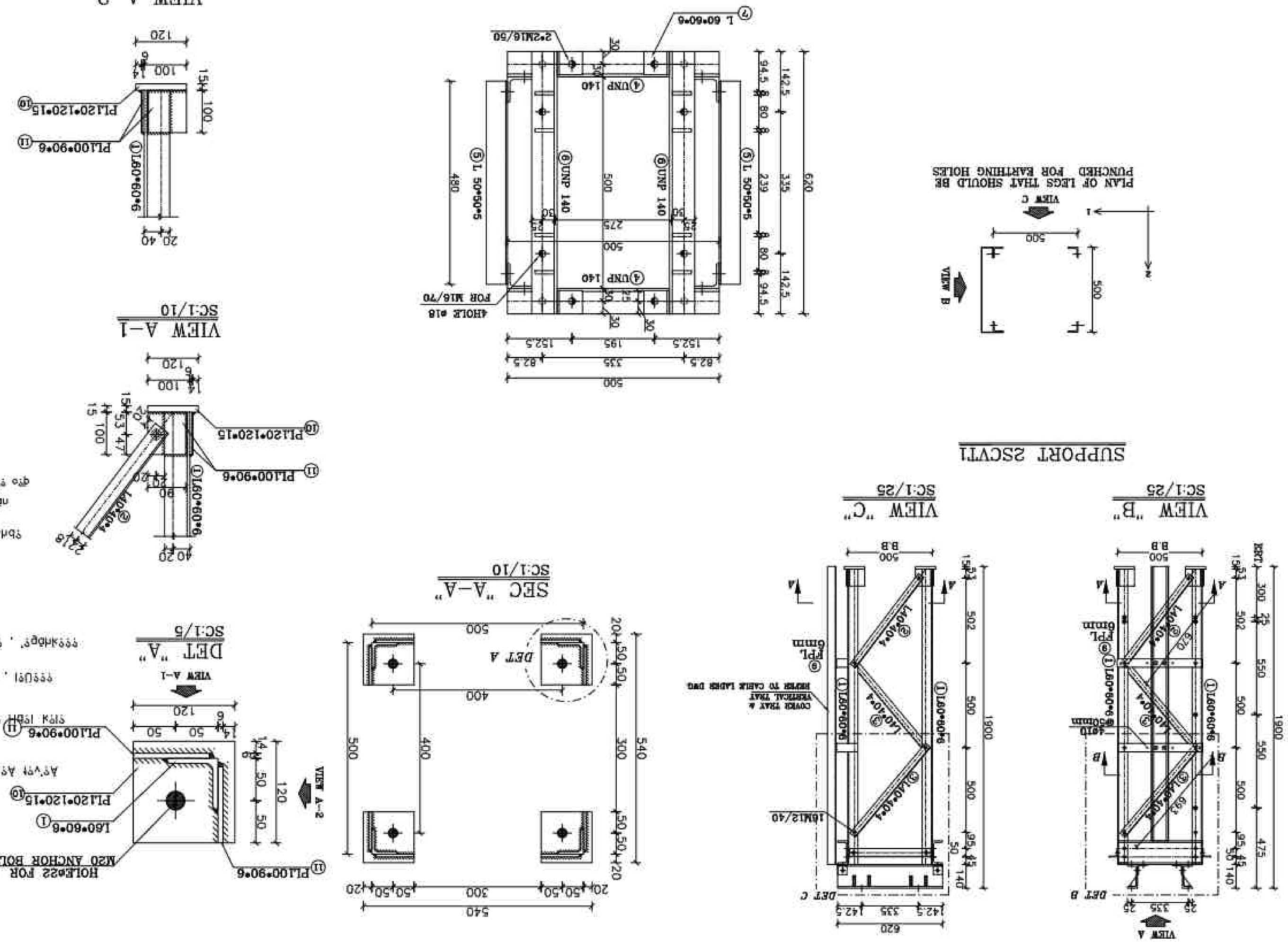


| | | | | | | | | | |
|---|---|---|---|---|---|---|---|---|---|
| 03 | 05/2026 | ACC TO COMMENT | A.SH | A.B | R.KH | M.DA |
| 02 | 04/2026 | ACC TO COMMENT | A.SH | A.B | R.KH | M.DA |
| 01 | 02/2026 | ACC TO COMMENT | A.SH | A.B | R.KH | M.DA |
| 00 | 01/2026 | ISSUE FOR REVIEW | A.SH | A.B | R.KH | M.DA |
| REV. | DATE | DESCRIPTION | DESIGN | DRAWN | CHECKED | APPROVED |

Client: Mojoneco Iran

Consultant: MOHAN SHARGH CO.

Sub Consultant:

Project: 100MW Solar Power Plant (SUBCONTRACT)

Title: EQUIPMENT STRUCTURE DRAWING
DRAWING OF EQUIPMENT
STRUCTURE 2SCVT1

| DOC NO.: | 28P2-B-3MC-DWG-SUS-000000-CV-122 | REV. 03 |
|---|---|---|

| SCALE | SIZE | SHEET | FORMAT |
|---|---|---|---|
| | | 09 OF 21 | DWG |

## KEY PLAN

5- FOR ALL WELDS "D"=6mm EXCEPT AS SHOWN.

(ALL THE HOLES ARE ø14 EXCEPT AS SHOWN)

**MECHANISM AXES (✱)**

**← EARTHING HOLES (✱)**

3- ● 12 HOLES (○) ● 22 HOLES (✱)
● 13 HOLES (⊖) ● 28 HOLES (✱)
● 14 HOLES (✱) ● 30 HOLES (✱)
● 15 HOLES (⊙) ● 35 HOLES (✱)
● 16 HOLES (✱) ● 35 HOLES (✱)

2-ALL BOLTS ARE GRADE (8.8)

1- STEEL ST-37

## LEGEND

| t(ورق ورق) (mm) | ضخامت جوش گوشه (mm) | ضخامت جوش لب به لب (mm) |
|---|---|---|
| t>6mm | 85 | 150 |
| 3<t≤6mm | 70 | 90 |
| 1.5<t≤3mm | 55 | 80 |

ضخامت ورق ورق ، ضخامت جوش گوشه و جوش لب به لب

در صورتی که ضخامت ورق کمتر از ۱.۵ میلی متر باشد، ضخامت جوش برابر ضخامت ورق خواهد بود.

در اتصال ورق به ورق (UPN) از جوش گوشه استفاده شود.

## NOTES

| REFERENCE | |
|---|---|
| REFERENCE TITLE | REFERENCE No. |
| | |
| | |
| | |
| | |

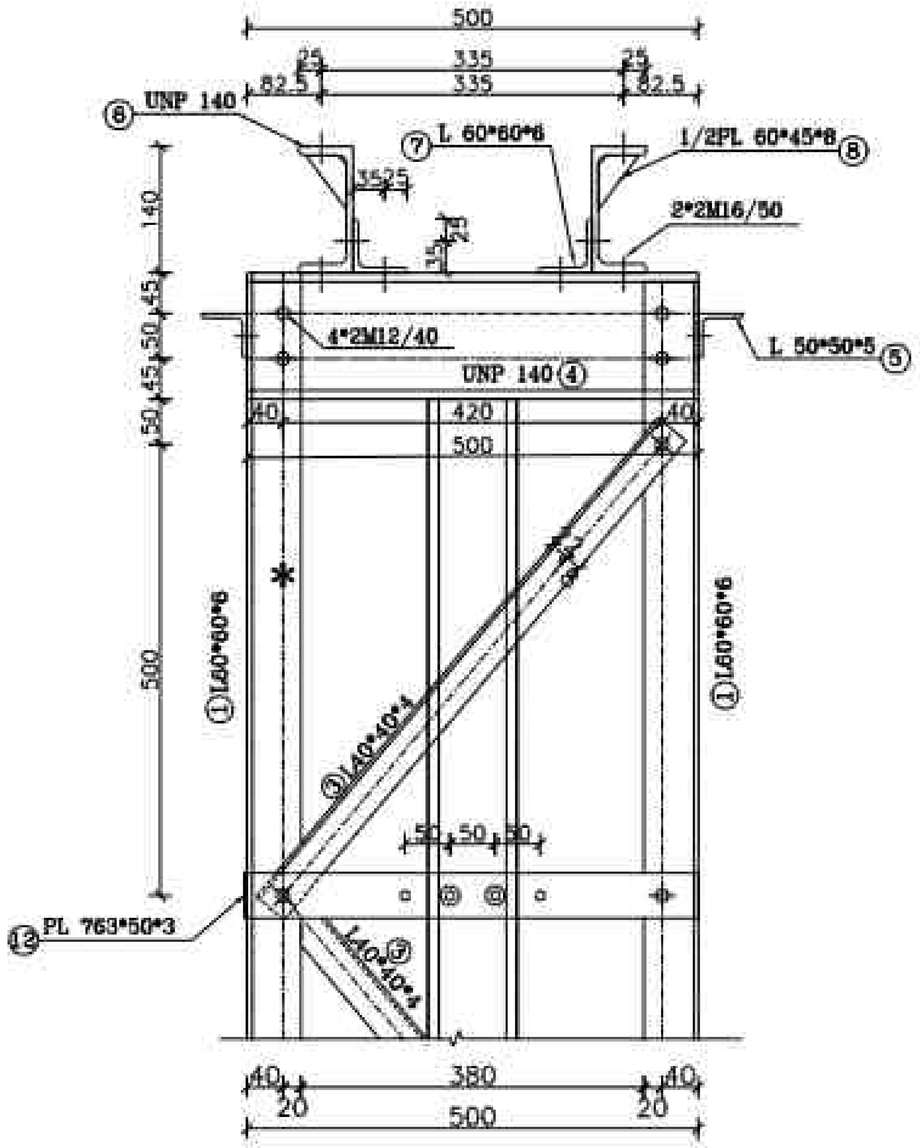


DETAIL "B"
SC:1/10

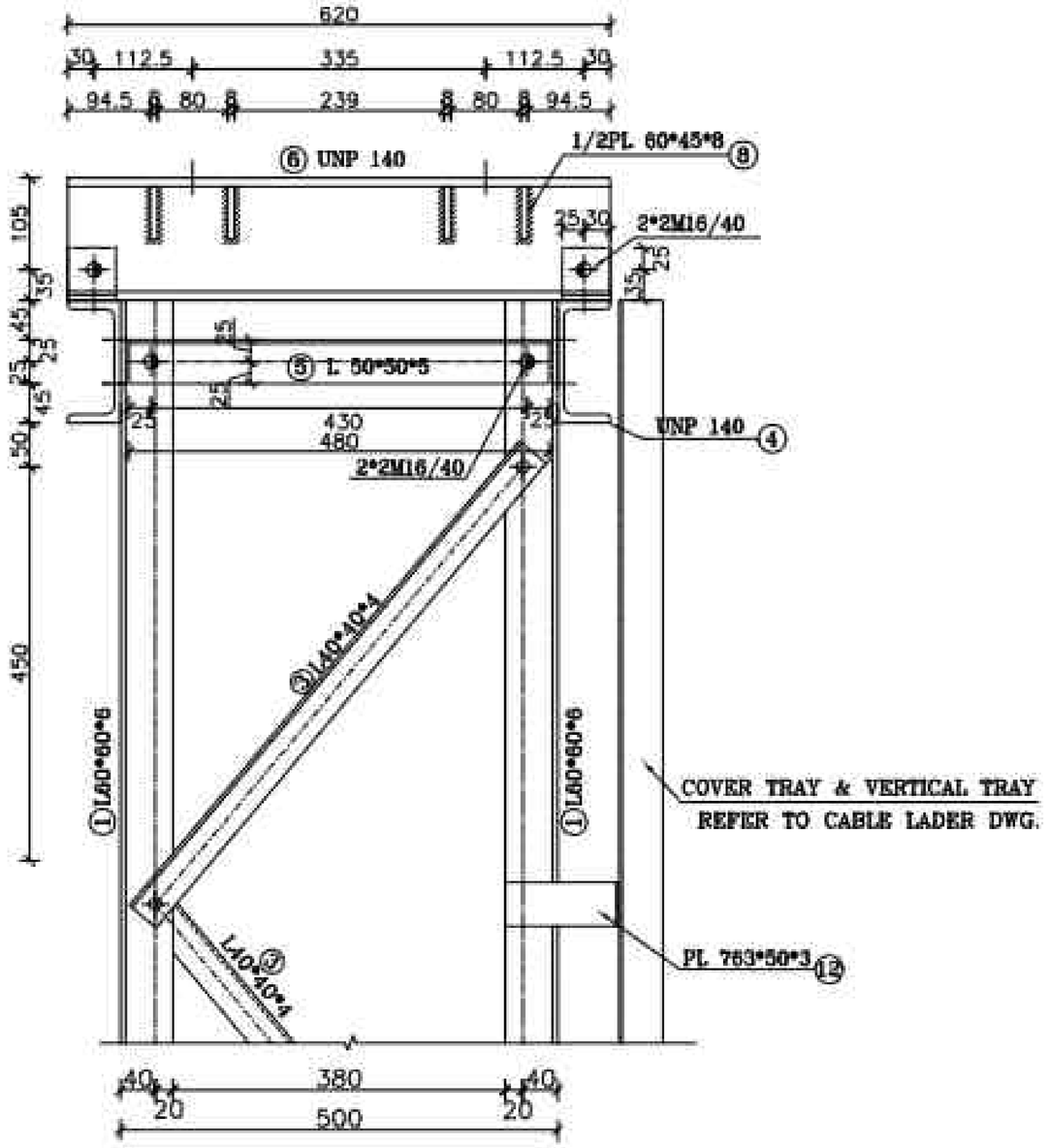


DETAIL "C"
SC:1/10

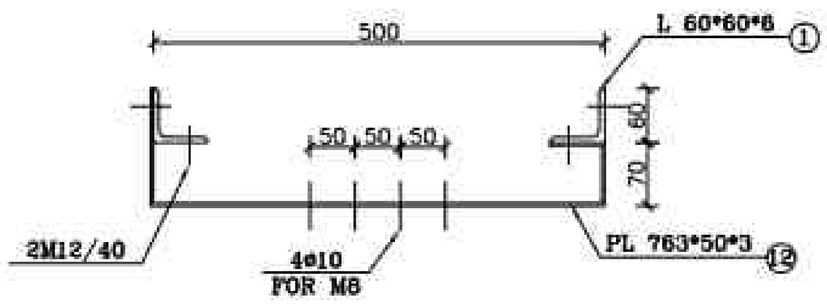


SEC "B-B"
SC:1/10

| BOLT LIST STRACTURE | | | |
|---|---|---|---|
| SIZE | QUANTITY | SET | TOTAL |
| M12/40 | 28 | 16 | 448 |
| M16/40 | 8 | 16 | 128 |
| M16/50 | 8 | 16 | 128 |
| BOLT LIST EQUIPMENT | | | |
| M16/70 | 4 | 16 | 64 |

## LISTOFFER STRUCTURE

| POS | SIZE (mm) | Length (m) | QTY PCS | Weight(kg) kg/m | Piece | Total |
|---|---|---|---|---|---|---|
| 1 | L 60*60*6 | 1.745 | 4 | 5.42 | 9.46 | 37.83 |
| 2 | L 40*40*4 | 0.670 | 4 | 2.42 | 1.62 | 6.49 |
| 3 | L 40*40*4 | 0.693 | 8 | 2.42 | 1.68 | 13.42 |
| 4 | UNP: 140 | 0.500 | 2 | 16.00 | 8.00 | 16.00 |
| 5 | L 50*50*5 | 0.480 | 2 | 3.77 | 1.81 | 3.62 |
| 6 | UNP: 140 | 0.620 | 2 | 16.00 | 9.92 | 19.84 |
| 7 | L 60*60*6 | 0.055 | 4 | 5.42 | 0.30 | 1.19 |
| 8 | 1/2PL: 60*45*8 | ------ | 8 | ------ | 0.170 | 1.356 |
| 9 | FPL: 40*40*6 | ------ | 4 | ------ | 0.075 | 0.301 |
| 10 | PL: 120*120*15 | ------ | 4 | ------ | 1.696 | 6.782 |
| 11 | PL: 100*90*6 | ------ | 8 | ------ | 0.424 | 3.391 |
| 12 | PL: 763*50*3 | ------ | 2 | ------ | 0.898 | 1.797 |
| ST-37-2(DIN 17100) | | Total Weight/For Structure | | | 112.01 | |
| SET SITE | | 16 | | | | |
| HOT DIP GALVANIZED | | Total Weight/For project | | | 1,792.22 | |

این جدول فهرست مصالح و آهن آلات بوده و جنبه اجرایی ندارد و طولها می بایست مجددا" توسط سازنده کنترل شود.

## REFERENCE

| REFERENCE. TITLE | REFERENCE. No. |
|---|---|
| | |
| | |
| | |
| | |

## NOTES

1- ASTM A123.A153

2- 1/2PL 60*45*8 (mm)

3- 1/2PL 60*45*8 (mm)

4- 1/2PL 60*45*8 (mm)

5- 1/2PL 60*45*8 (mm)

| | | |
|---|---|---|
| t>6mm | 85 | 150 |
| 3<t≤6mm | 70 | 90 |
| 1.5<t≤3mm | 55 | 80 |

## LEGEND

1- STEEL: ST-37
2-ALL BOLTS ARE GRADE (8.8)
3- ø 12 HOLES (○) ø 22 HOLES (⊕)
ø 13 HOLES (⊖) ø 24 HOLES (⊕)
ø 14 HOLES (⊕) ø 28 HOLES (⊕)
ø 15 HOLES (⊙) ø 30 HOLES (⊕)
ø 16 HOLES (⊕) ø 35 HOLES (⊕)
MECHANISM AXES (⊕)
4- EARTHING HOLES (✱)
(ALL THE HOLES ARE ø14 EXCEPT AS SHOWN)
5- FOR ALL WELDS "D"=6mm EXCEPT AS SHOWN. D

## KEY PLAN

| REV. | DATE | DESCRIPTION | DESIGN | DRAWN | CHECKED | APPROVED |
|---|---|---|---|---|---|---|
| 03 | 05/2026 | ACC TO COMMENT | A.SH | A.B | R.KH | M.DA |
| 02 | 04/2026 | ACC TO COMMENT | A.SH | A.B | R.KH | M.DA |
| 01 | 02/2026 | ACC TO COMMENT | A.SH | A.B | R.KH | M.DA |
| 00 | 01/2026 | ISSUE FOR REVIEW | A.SH | A.B | R.KH | M.DA |

Client:

Consultant: Monenco Iran

Contractor: MOHAM SHARGH CO.

Sub Contractor:

Project: 100MW Solar Power Plant (SARCHESHME)

Title: EQUIPMENT STRUCTURE DRAWING
DRAWING OF EQUIPMENT STRUCTURE 2SCVT1

| DOC NO.: | 28P2-B-3MG-DWG-SUS-000000-CV-122 | REV. 03 |
|---|---|---|

| SCALE | SIZE | SHEET | FORMAT |
|---|---|---|---|
| | | 10 OF 31 | DWG |

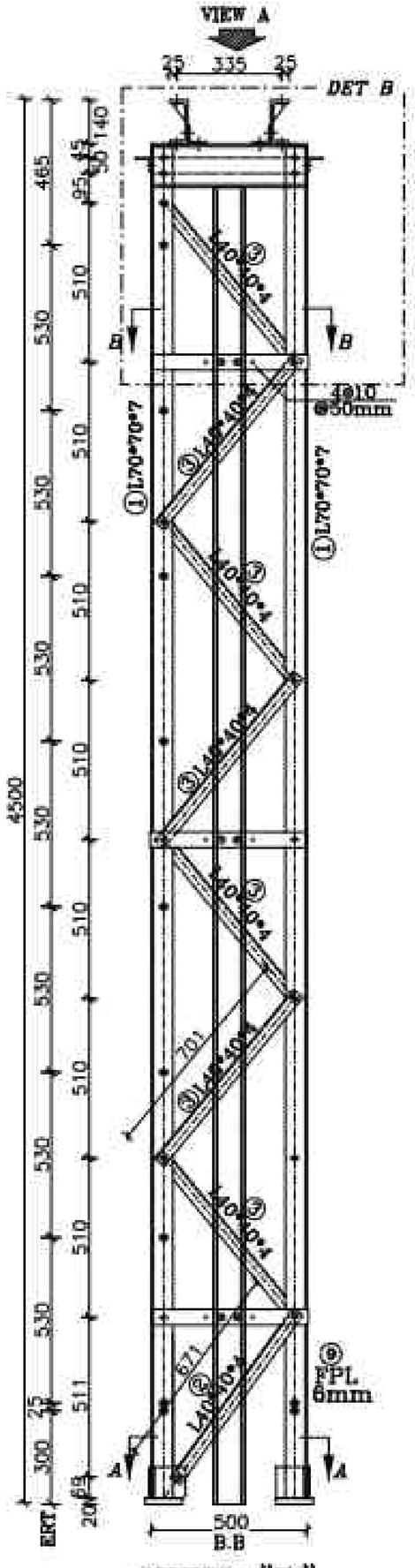


VIEW "B"
SC:1/25

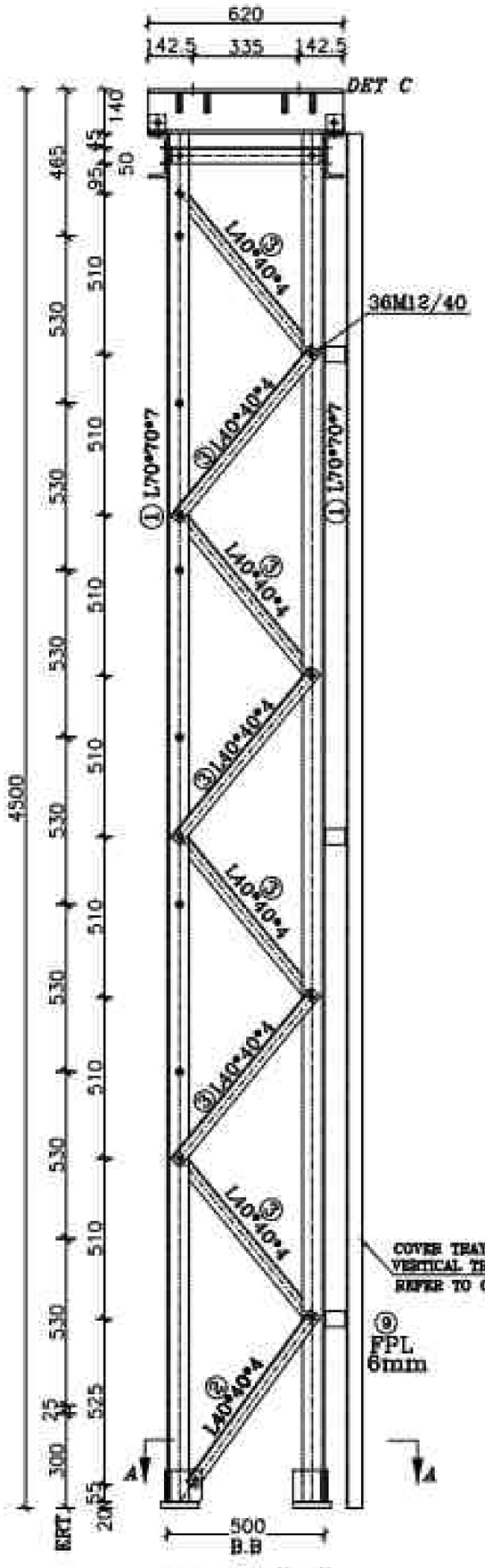


VIEW "C"
SC:1/25

SUPPORT 2SCVT2

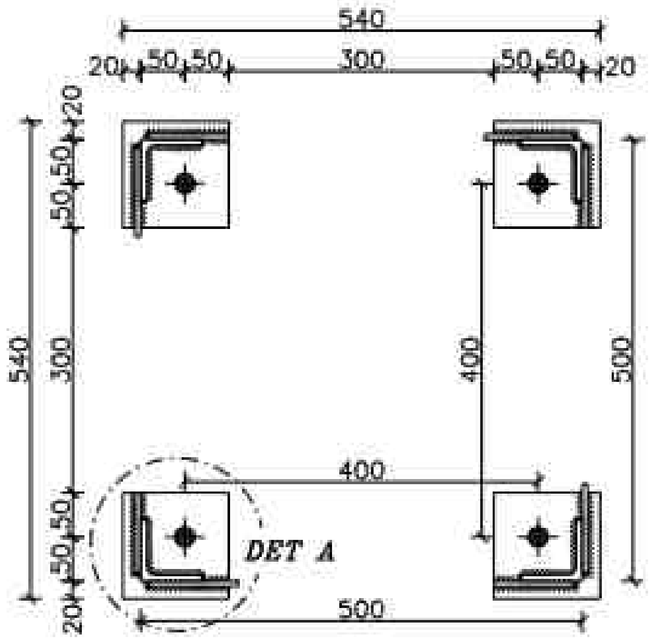


SEC "A–A"
SC:1/10

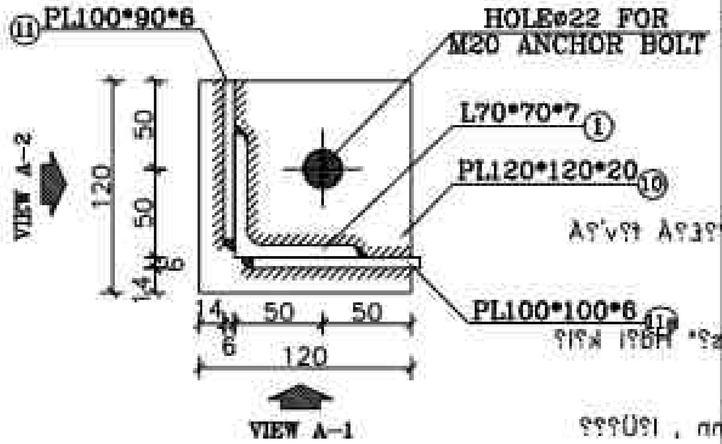


VIEW A–1

DET "A"
SC:1/5

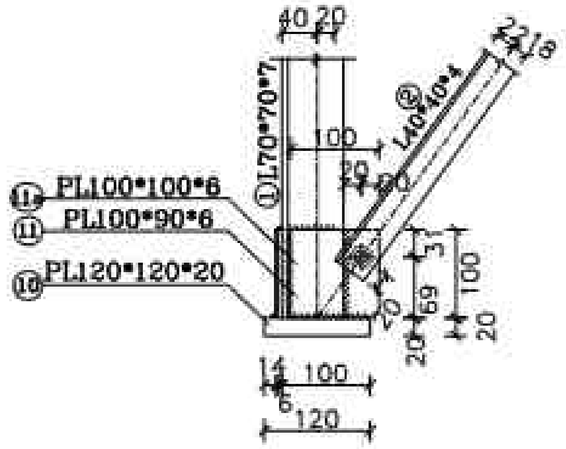


VIEW A–1
SC:1/10

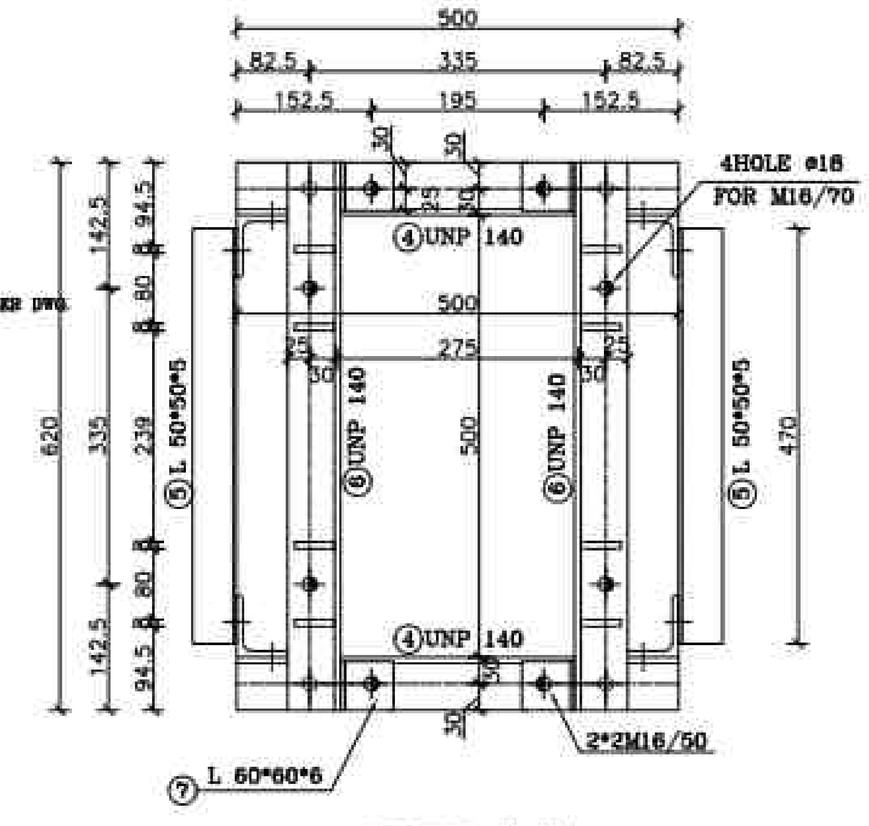


VIEW "A"
SC:1/10

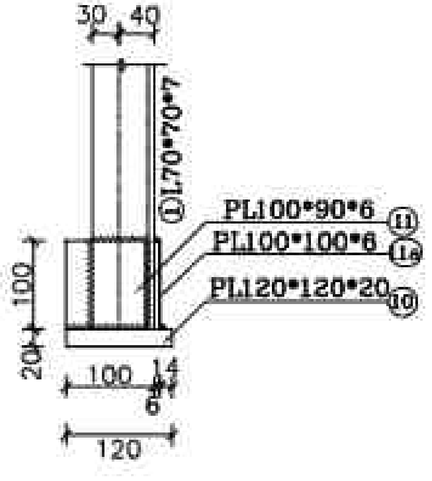


VIEW A–2
SC:1/10

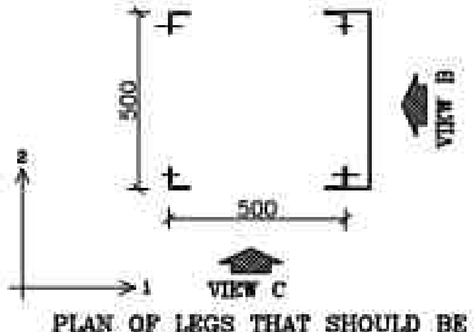


PLAN OF LEGS THAT SHOULD BE
PUNCHED FOR EARTHING HOLES

## REFERENCE

| REFERENCE. TITLE | REFERENCE. No. |
|---|---|
| | |
| | |
| | |
| | |

## NOTES

1- Unless otherwise specified all dimensions are in mm.
2- Welding shall be in accordance with AWS D1.1.
3- Welding electrode shall be E7018 or equivalent.
4- Material specification: ASTM A123,A153
5- All welds shall be continuous.
6- Welding shall be performed by certified welders.
7- Welding procedure shall be in accordance with AWS D1.1.
8- Welding shall be performed in the shop.
9- Welding shall be performed in the field.
10- Welding shall be performed in the shop.
11- Welding shall be performed in the field.

| (mm) | | |
|---|---|---|
| t>6mm | 85 | 150 |
| 3<t≤6mm | 70 | 90 |
| 1.5<t≤3mm | 55 | 80 |

## LEGEND

1- STEEL: St-37
2-ALL BOLTS ARE GRADE: (8.8)
3- ● 12 HOLES (○) ● 22 HOLES (⊕)
● 13 HOLES (⊖) ● 24 HOLES (⊕)
● 14 HOLES (⊕) ● 26 HOLES (⊕)
● 15 HOLES (⊕) ● 30 HOLES (⊕)
● 18 HOLES (⊕) ● 35 HOLES (⊕)
MECHANISM AXES (⊕)
4- EARTHING HOLES (#)
(ALL THE HOLES ARE ⌀14 EXCEPT AS SHOWN)
5- FOR ALL WELDS "D"=6mm EXCEPT AS SHOWN.

## KEY PLAN

| REV. | DATE | DESCRIPTION | DESIGN | DRAWN | CHECKED | APPROVED |
|---|---|---|---|---|---|---|
| 03 | 05/2026 | ACC TO COMMENT | A.SH | A.B | R.KH | M.DA |
| 02 | 04/2026 | ACC TO COMMENT | A.SH | A.B | R.KH | M.DA |
| 01 | 02/2026 | ACC TO COMMENT | A.SH | A.B | R.KH | M.DA |
| 00 | 01/2026 | ISSUE FOR REVIEW | A.SH | A.B | R.KH | M.DA |

Client:

Consultant: Montenco Iran

Contractor: MOHAM SHARGH CO.

Sub Contractor:

Project: 100MW Solar Power Plant (SARCHESHME)

Title: EQUIPMENT STRUCTURE DRAWING
DRAWING OF EQUIPMENT
STRUCTURE 2SCVT2

| DOC NO.: | 28P2-B-3MG-DWG-SUS-000000-CV-122 | REV. 03 |
|---|---|---|

| SCALE | SIZE | SHEET | FORMAT |
|---|---|---|---|
| | | 11 OF 31 | DWG |

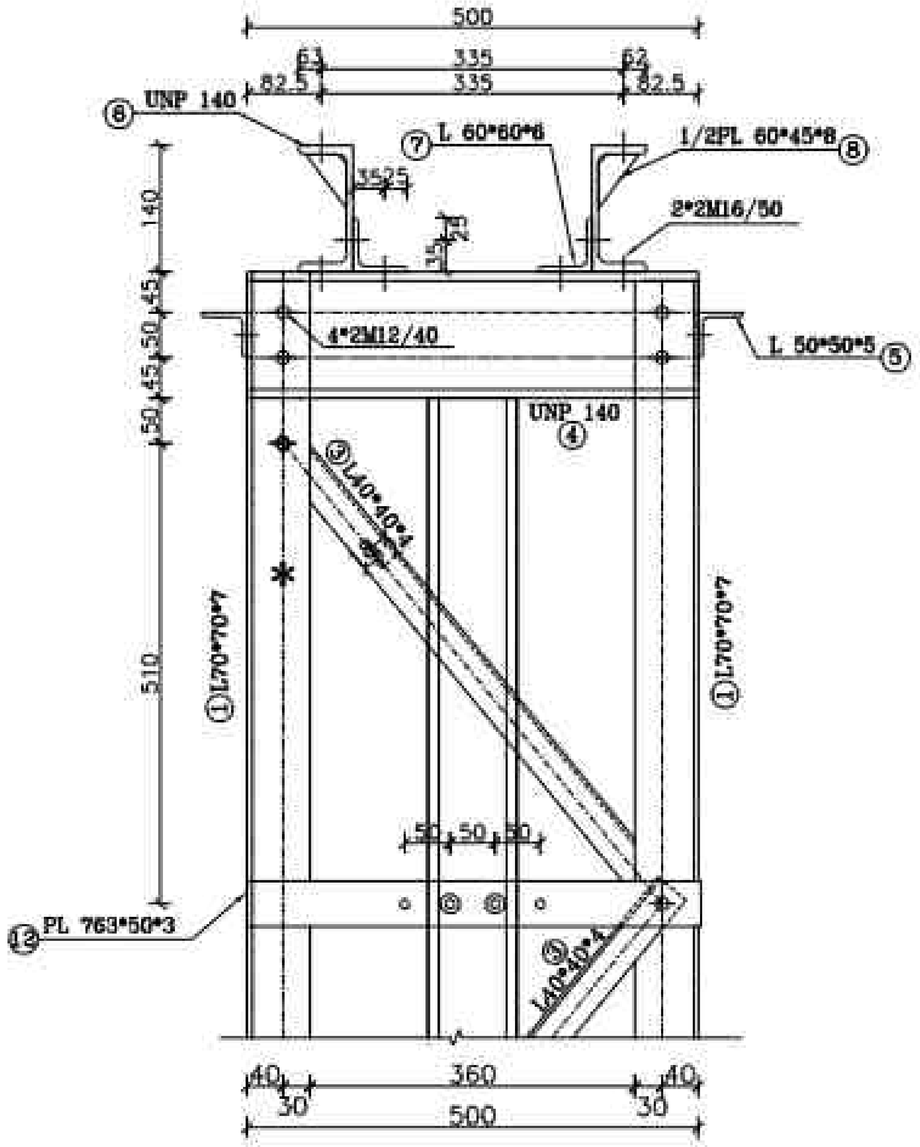


DETAIL "B"
SC:1/10

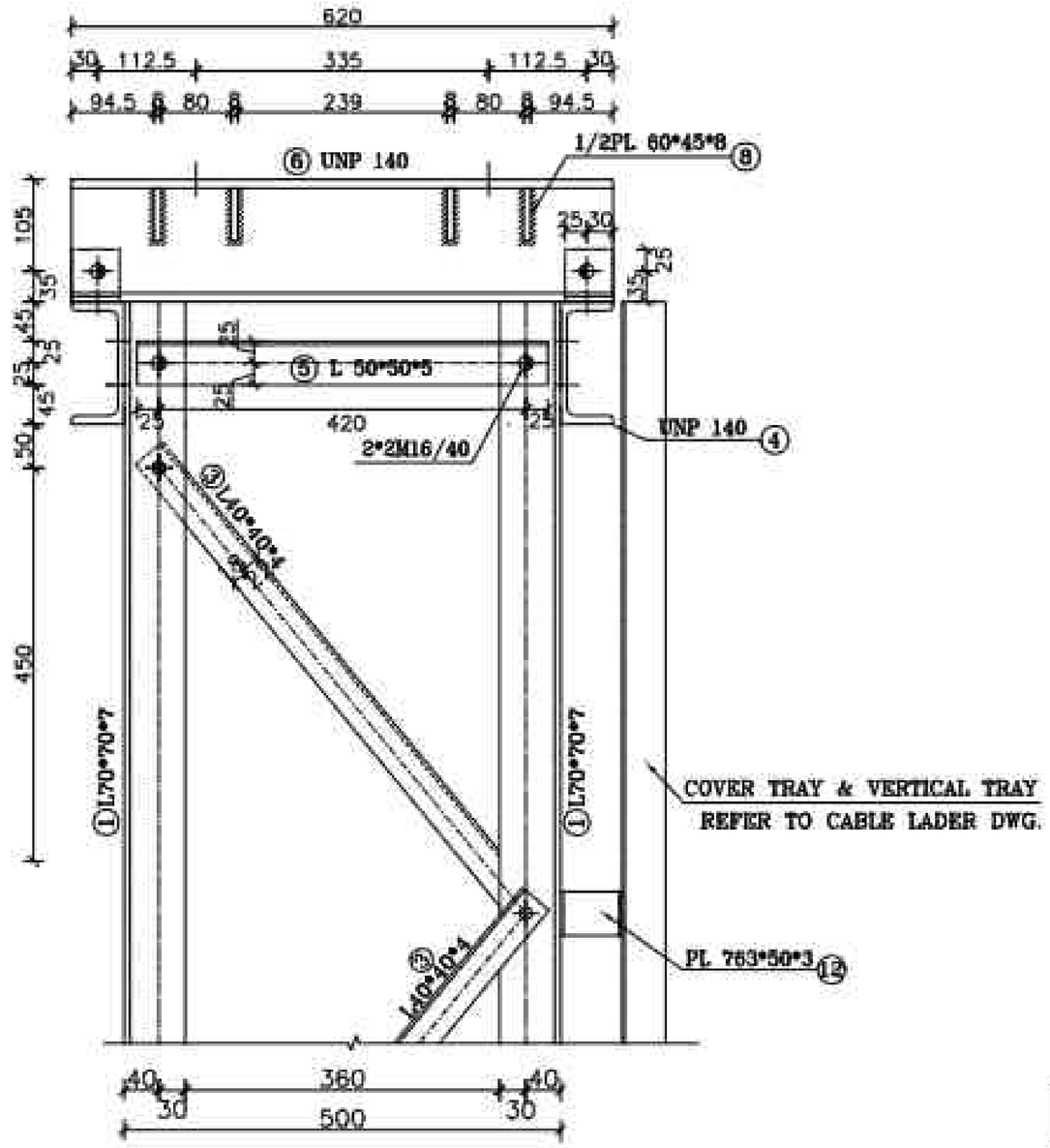


DETAIL "C"
SC:1/10

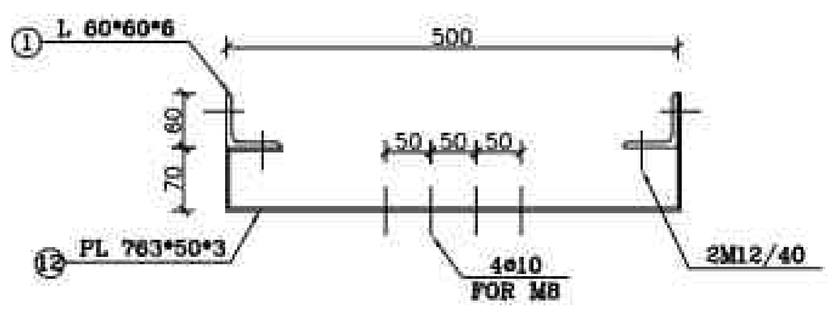


SEC "B-B"
SC:1/10

| BOLT LIST STRACTURE | | | |
|---|---|---|---|
| SIZE | QUANTITY | SET | TOTAL |
| M12/40 | 50 | 2 | 100 |
| M16/40 | 8 | 2 | 16 |
| M16/50 | 8 | 2 | 16 |
| BOLT LIST EQUIPMENT | | | |
| M16/70 | 4 | 2 | 8 |

## LISTOFFER STRUCTURE

| POS | SIZE (mm) | Length (m) | QTY PCS | Weight(kg) kg/m | Piece | Total |
|---|---|---|---|---|---|---|
| 1 | L 70*70*7 | 4.340 | 4 | 7.38 | 32.03 | 128.12 |
| 2 | L 40*40*4 | 0.688 | 4 | 2.42 | 1.66 | 6.66 |
| 3 | L 40*40*4 | 0.701 | 28 | 2.42 | 1.70 | 47.50 |
| 4 | UNP: 140 | 0.500 | 2 | 16.00 | 8.00 | 16.00 |
| 5 | L 50*50*5 | 0.470 | 2 | 3.77 | 1.77 | 3.54 |
| 6 | UNP: 140 | 0.620 | 2 | 16.00 | 9.92 | 19.84 |
| 7 | L 60*60*6 | 0.055 | 4 | 5.42 | 0.30 | 1.19 |
| 8 | 1/2PL: 60*45*8 | ------ | 8 | ------ | 0.170 | 1.356 |
| 9 | FPL: 40*40*7 | ------ | 4 | ------ | 0.137 | 0.548 |
| 10 | PL: 120*120*20 | ------ | 4 | ------ | 2.260 | 9.040 |
| 11 | PL: 100*90*6 | ------ | 4 | ------ | 0.424 | 1.696 |
| 11a | PL: 100*100*6 | ------ | 4 | ------ | 0.471 | 1.884 |
| 12 | PL: 763*50*3 | ------ | 3 | ------ | 0.898 | 2.695 |
| ST-37-2(DIN 17100) | | Total Weight/For Structure | | | 240.07 | |
| SET SITE | | | 2 | | | |
| HOT DIP GALVANIZED | | Total Weight/For project | | | 480.14 | |

این جدول فهرست مصالح و آهن آلات بوده و جنبه اجرایی ندارد و طولها می بایست مجدداً توسط سازنده کنترل شود.

## REFERENCE

| REFERENCE. TITLE | REFERENCE. No. |
|---|---|
| | |
| | |
| | |
| | |

## NOTES

۱- مطابق با layout REV.07 ۱۲ ۲۰۲۵.
۲- مطابق با ۲۲ پیچ ۱۲۲۲۲۲۲ ۱۲ ۲۰۲۵.
۳- در کلیه ۲۲۲ ۲۲۲ ۲۲ ۲۲۲۲ ۵۵ ۲۰۲۵ مطابق با ۲۲ ۲۰۲۵ .
۴- M ۲۲۲ ۲۰۲۵ ۲۲ ۲۲۲ ۲۲ ۲۲۲۲ مطابق با ۲ ۲۲۲۲۲۲ ۲۲۲۲
۵- ۲۲۲۲ ۲۲ ۲۲۲۲۲۲ ۲۲۲۲۲۲ ۲۲۲۲ ۲۲ ۲۲۲۲ .
۶- ۲۲۲۲۲۲ ۲۲۲۲۲۲ ۲۲۲ ۲۲۲ ۲۲ ۲۲۲۲ ۲۲۲۲ ۲۲۲۲ ۲۲۲۲ ۲۲۲۲ ۲۲۲۲ ASTM A123.A153
۷- ۲۲۲ ۲۲۲۲۲۲ ۲۲۲۲۲۲ ۲۲۲۲۲۲ ۲۲۲۲۲۲ ۲۲۲۲ ۲۲۲۲ ۲۲۲۲ ۲۲۲۲ ۲۲۲۲ ۲۲۲۲ ۲۲۲۲ .
۸- ۲۲۲۲۲۲ ۲۲۲۲۲۲ ۲۲ ۲۲۲۲۲۲ ۲۲۲۲۲۲ ۲۲ ۲۲ ۲۲۲ ۲۲۲۲۲۲ ۲۲۲۲۲۲ ۲۲۲۲۲۲ ۲۲۲۲۲۲ .
۹- ۲۲۲ ۲۲۲۲۲۲ ۲۲۲۲۲۲ ۲۲۲۲۲۲ ۲۲۲۲۲۲ ۲۲۲۲۲۲ ۲۲۲۲۲۲ ۲۲۲۲۲۲ .
۱۰- ۲۲۲۲۲۲ ۲۲۲۲۲۲ ۲۲۲۲۲۲ ۲۲۲۲۲۲ ۲۲۲۲۲۲ .
۱۱- ۲۲۲۲۲۲ ۲۲۲۲۲۲ ۲۲ ۲۲۲۲۲۲ ۲۲۲۲۲۲ ۲۲۲۲۲۲ D4398917
۱۲- ۲۲۲۲۲۲ ۲۲۲۲۲۲ ۲۲۲۲۲۲ ۲۲۲۲۲۲ ۲۲۲۲۲۲ ۲۲۲۲۲۲ .
۱۳- ۲۲۲۲۲۲ ۲۲۲۲۲۲ ۲۲۲۲۲۲ ۲۲۲۲۲۲ ۲۲۲۲۲۲ ۲۲۲۲۲۲ ۲۲۲۲۲۲ ۲۲۲۲۲۲ ۲۲۲۲۲۲ ۲۲۲۲۲۲ ۲۲۲۲۲۲ ۲۲۲۲۲۲ .
۱۴- ۲۲۲۲۲۲ ۲۲۲۲۲۲ ۲۲۲۲۲۲ ۲۲۲۲۲۲ ۲۲۲۲۲۲ ۲۲۲۲۲۲ ۲۲۲۲۲۲ ۲۲۲۲۲۲ ۲۲۲۲۲۲ ۲۲۲۲۲۲ ۲۲۲۲۲۲ ۲۲۲۲۲۲ .

| ۲۲۲۲۲۲ ۲۲۲۲۲۲ (mm) | ۲۲۲۲۲۲ ۲۲۲۲۲۲ ۲۲۲۲۲۲ ۲۲۲۲۲۲ | ۲۲۲۲۲۲ ۲۲۲۲۲۲ ۲۲۲۲۲۲ ۲۲۲۲۲۲ |
|---|---|---|
| t>6mm | 85 | 150 |
| 3<t≤6mm | 70 | 90 |
| 1.5<t≤3mm | 55 | 80 |

## LEGEND

1- STEEL: ST-37
2-ALL BOLTS ARE GRADE: (8.8)
3- • 12 HOLES (○) • 22 HOLES (⊕)
• 13 HOLES (⊖) • 24 HOLES (⊕)
• 14 HOLES (⊕) • 26 HOLES (⊕)
• 15 HOLES (⊕) • 30 HOLES (⊕)
• 18 HOLES (⊕) • 35 HOLES (⊕)
MECHANISM AXES (⊕)
4- EARTHING HOLES (✱)
(ALL THE HOLES ARE ø14 EXCEPT AS SHOWN)
5- FOR ALL WELDS "D"=6mm EXCEPT AS SHOWN. D

## KEY PLAN

| REV. | DATE | DESCRIPTION | DESIGN | DRAWN | CHECKED | APPROVED |
|---|---|---|---|---|---|---|
| 03 | 05/2026 | ACC TO COMMENT | A.SH | A.B | R.KH | M.DA |
| 02 | 04/2026 | ACC TO COMMENT | A.SH | A.B | R.KH | M.DA |
| 01 | 02/2026 | ACC TO COMMENT | A.SH | A.B | R.KH | M.DA |
| 00 | 01/2026 | ISSUE FOR REVIEW | A.SH | A.B | R.KH | M.DA |

Client:
Consultant: موانکو ایران Monenco Iran
Contractor: MOHAM SHARGH CO.
Sub Contractor:

Project: 100MW Solar Power Plant (SANCHESHME)

Title: EQUIPMENT STRUCTURE DRAWING
DRAWING OF EQUIPMENT STRUCTURE 2SCVT2

| DOC NO.: | 28P2-B-3MC-DWG-SUS-000000-CV-122 | REV. 03 |
|---|---|---|
| SCALE | SIZE | SHEET 12 OF 31 | FORMAT DWG |

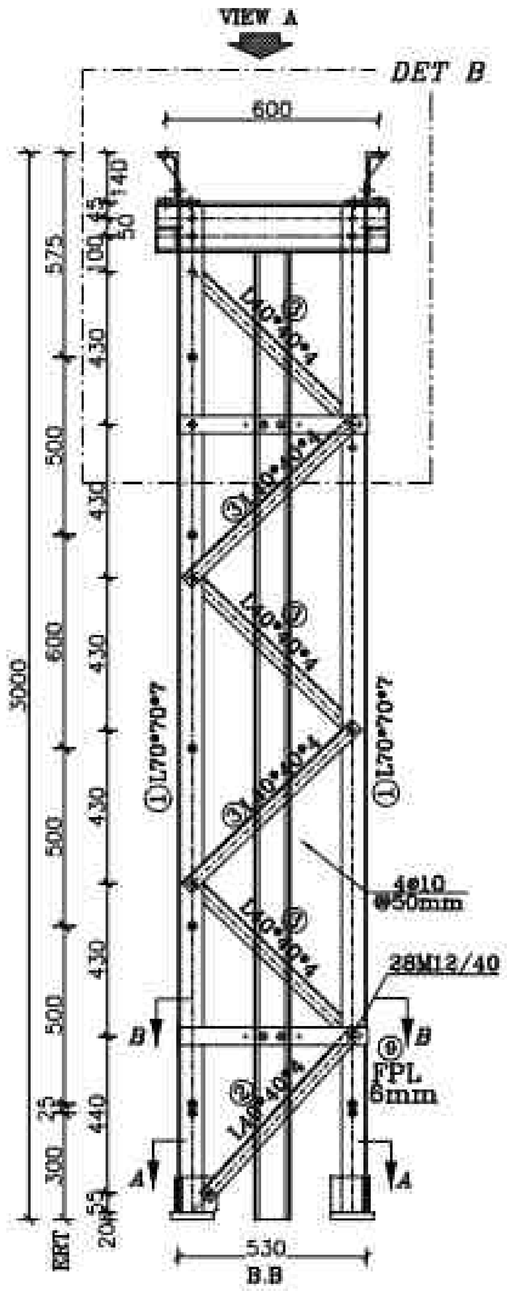


VIEW "B"
SC:1/25

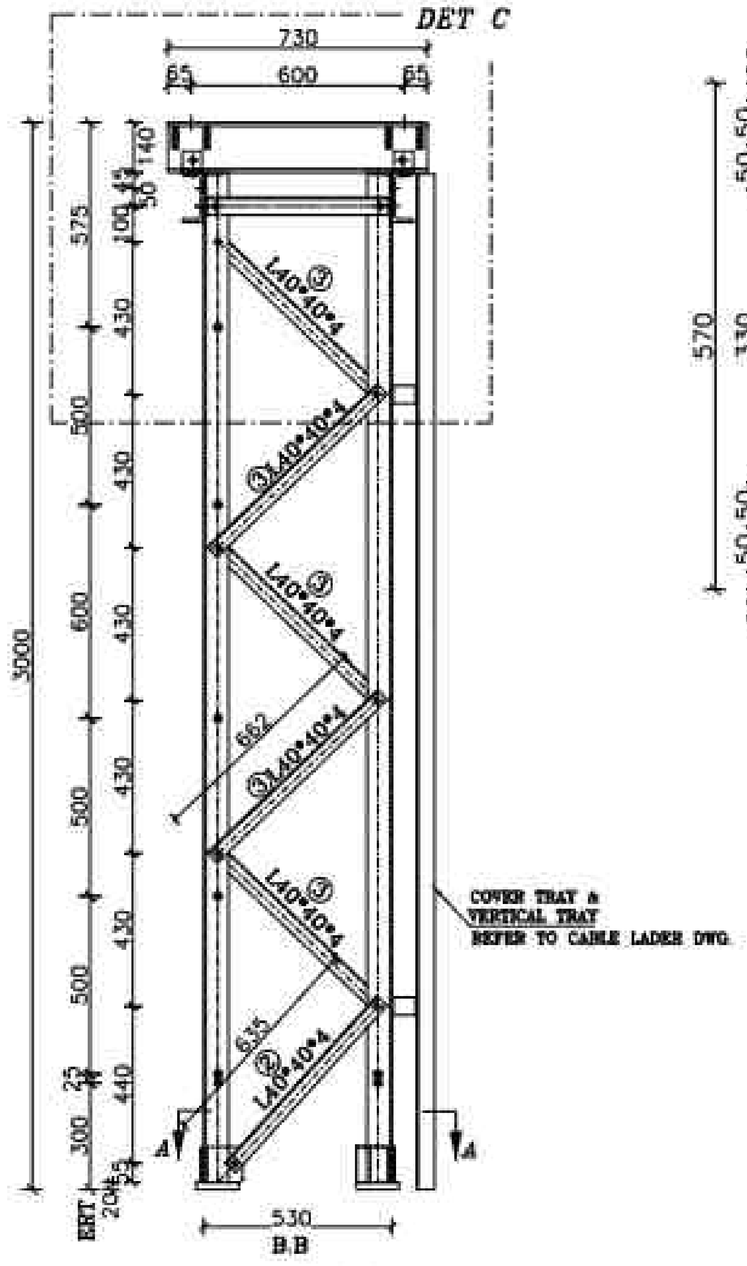


VIEW "C"
SC:1/25

SUPPORT 2SCT

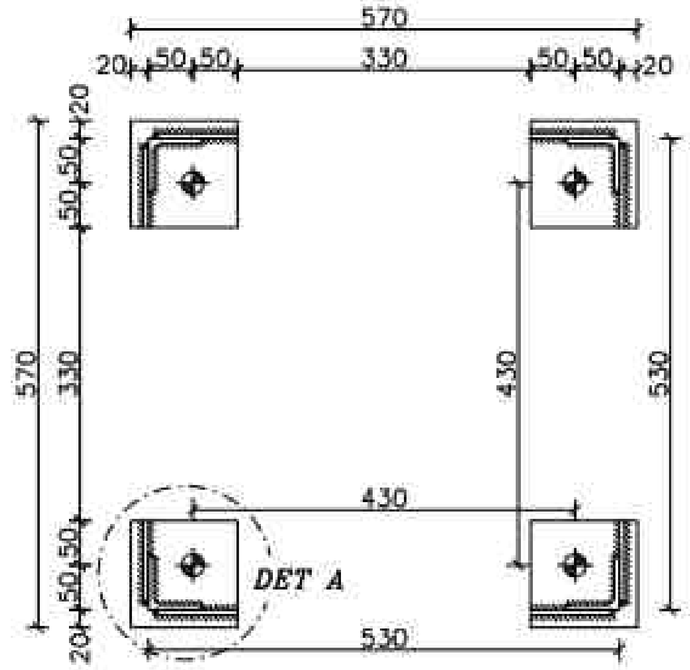


SEC "A-A"

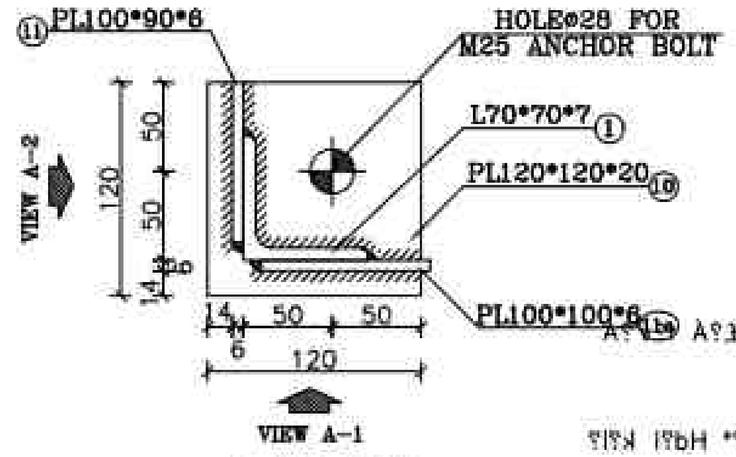


DET "A"
SC:1/5

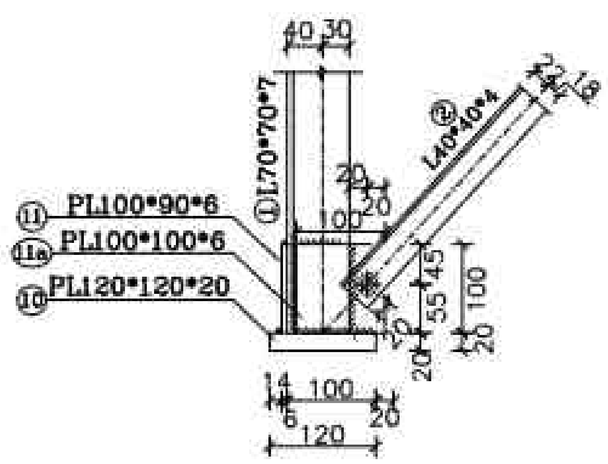


VIEW A-1
SC:1/10

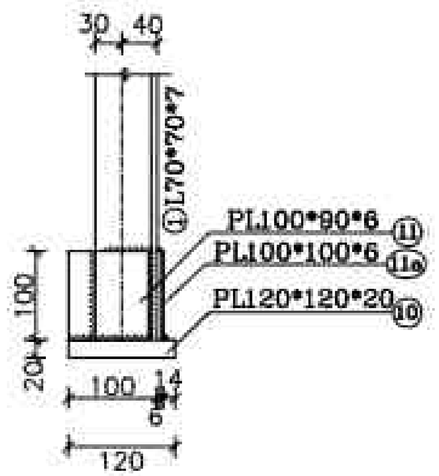


VIEW A-2
SC:1/10

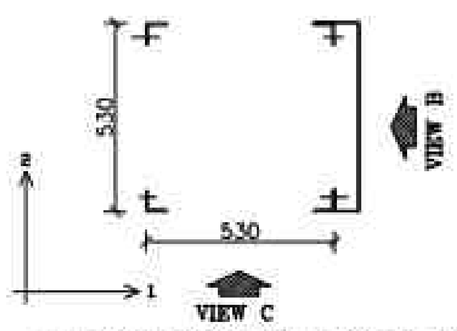


PLAN OF LEGS THAT SHOULD BE PUNCHED FOR EARTHING HOLES

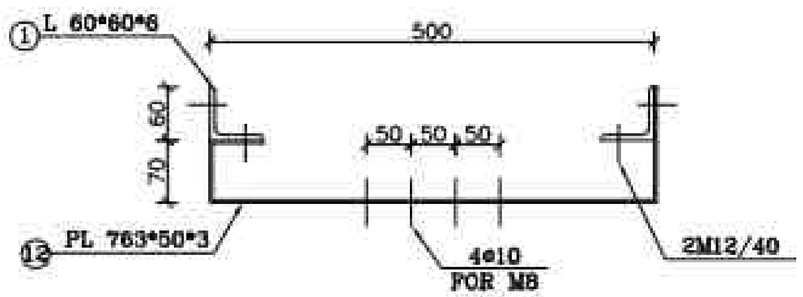


SEC "B-B"
SC:1/10

## REFERENCE

| REFERENCE. TITLE | REFERENCE. No. |
|---|---|
| | |
| | |
| | |
| | |

## NOTES

1- STEEL: ST-37
2-ALL BOLTS ARE GRADE (8.8)
3- ● 12 HOLES (○) ● 22 HOLES (⊕)
● 13 HOLES (⊖) ● 24 HOLES (⊕)
● 14 HOLES (⊕) ● 28 HOLES (⊕)
● 15 HOLES (⊕) ● 30 HOLES (⊕)
● 18 HOLES (⊕) ● 35 HOLES (⊕)
MECHANISM AXES (⊕)
4- EARTHING HOLES (⊕)
(ALL THE HOLES ARE ø14 EXCEPT AS SHOWN)
5- FOR ALL WELDS "D"=6mm EXECEPT AS SHOWN.

## KEY PLAN

| REV. | DATE | DESCRIPTION | DESIGN | DRAWN | CHECKED | APPROVED |
|---|---|---|---|---|---|---|
| 03 | 05/2026 | ACC TO COMMENT | A.SH | A.B | R.KH | M.DA |
| 02 | 04/2026 | ACC TO COMMENT | A.SH | A.B | R.KH | M.DA |
| 01 | 02/2026 | ACC TO COMMENT | A.SH | A.B | R.KH | M.DA |
| 00 | 01/2026 | ISSUE FOR REVIEW | A.SH | A.B | R.KH | M.DA |

Client:

Consultant: Mapenco Iran

Contractor: MOHAM SHARGH CO.

Sub Contractor:

Project: 1000MW Solar Power Plant (SARCHESHME)

Title: EQUIPMENT STRUCTURE DRAWING
DRAWING OF EQUIPMENT STRUCTURE 2SCT

| DOC NO.: | 28P2-B-3MG-DWG-SUS-000000-CV-122 | REV. 03 |
|---|---|---|
| SCALE | SIZE | SHEET 13 OF 31 | FORMAT DWG |

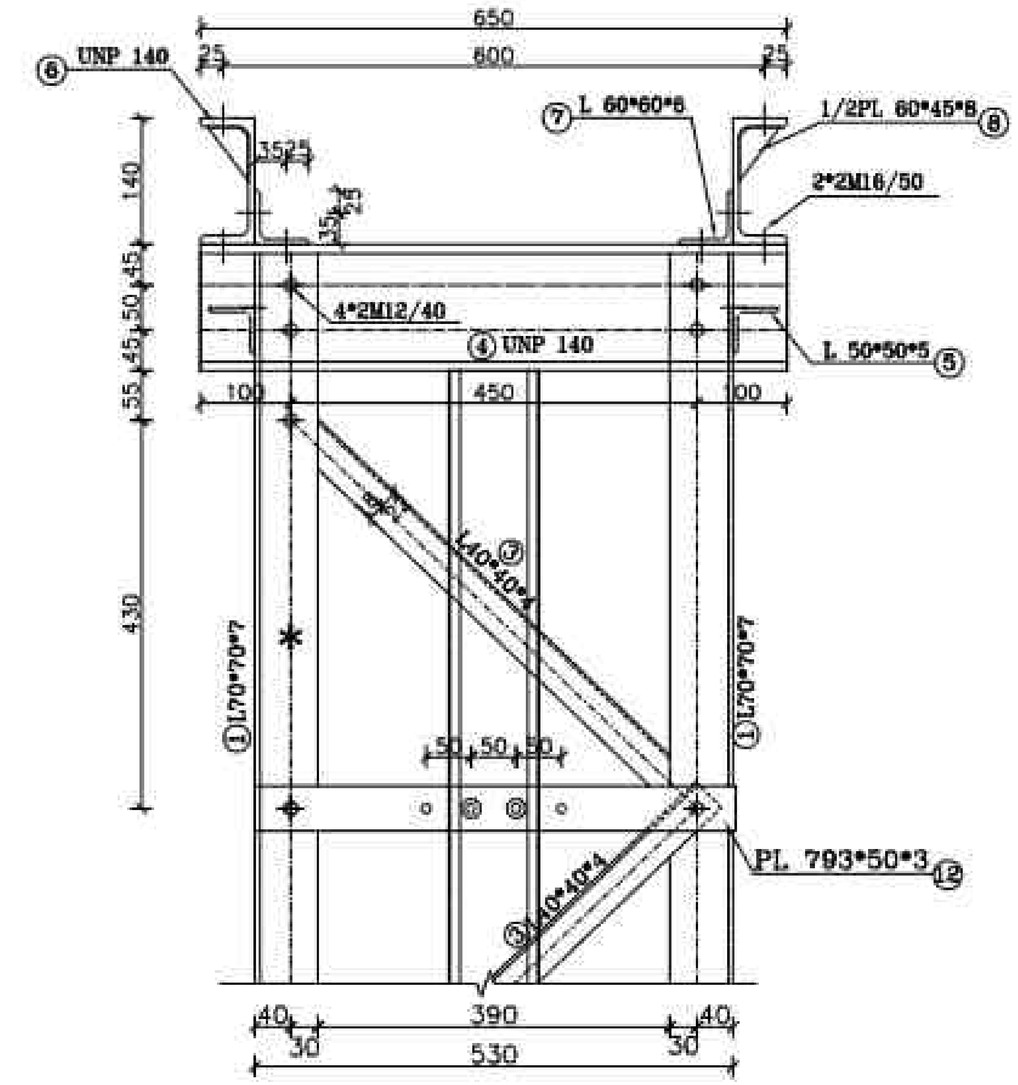


DETAIL "B"
SC:1/10

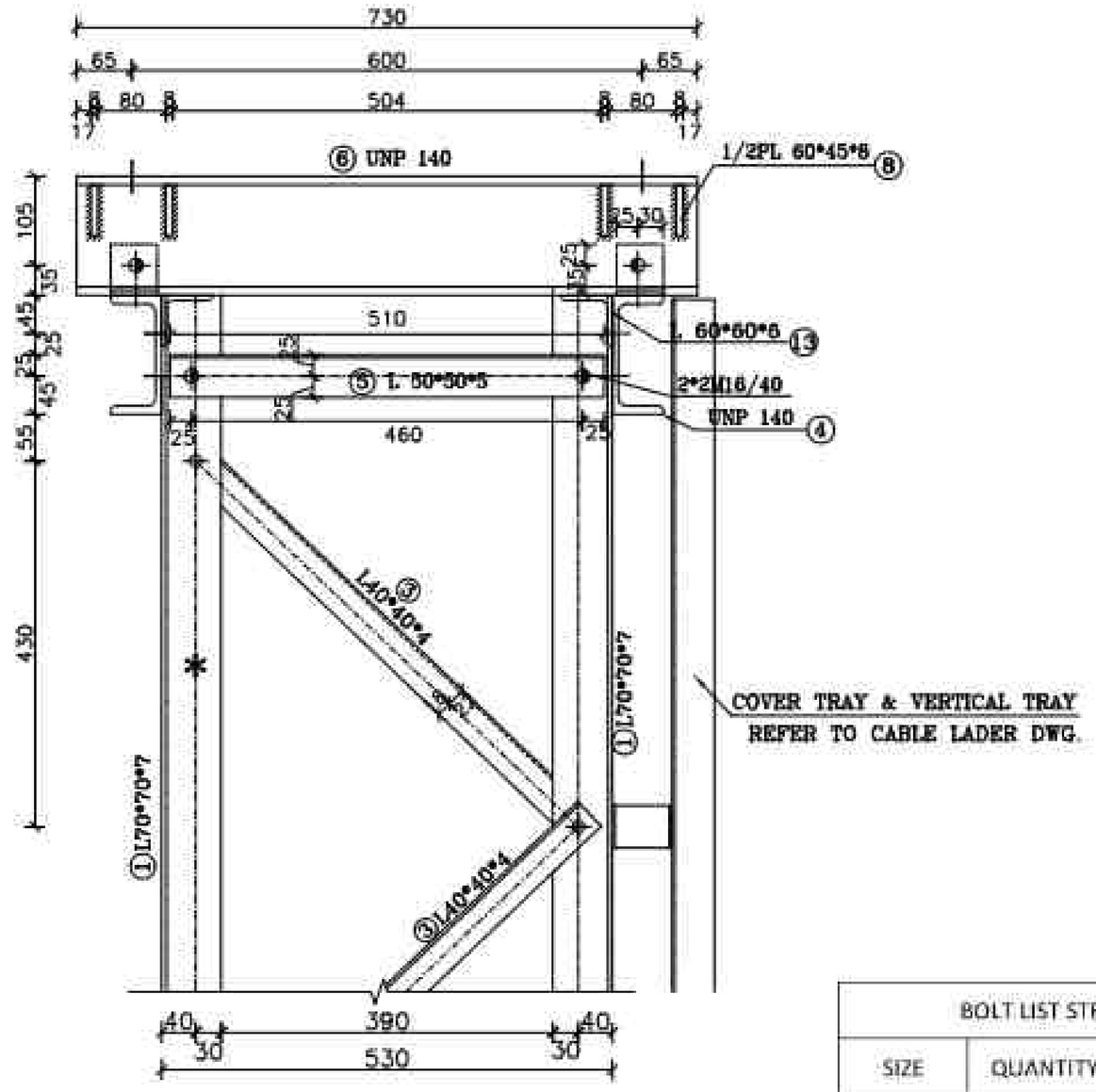


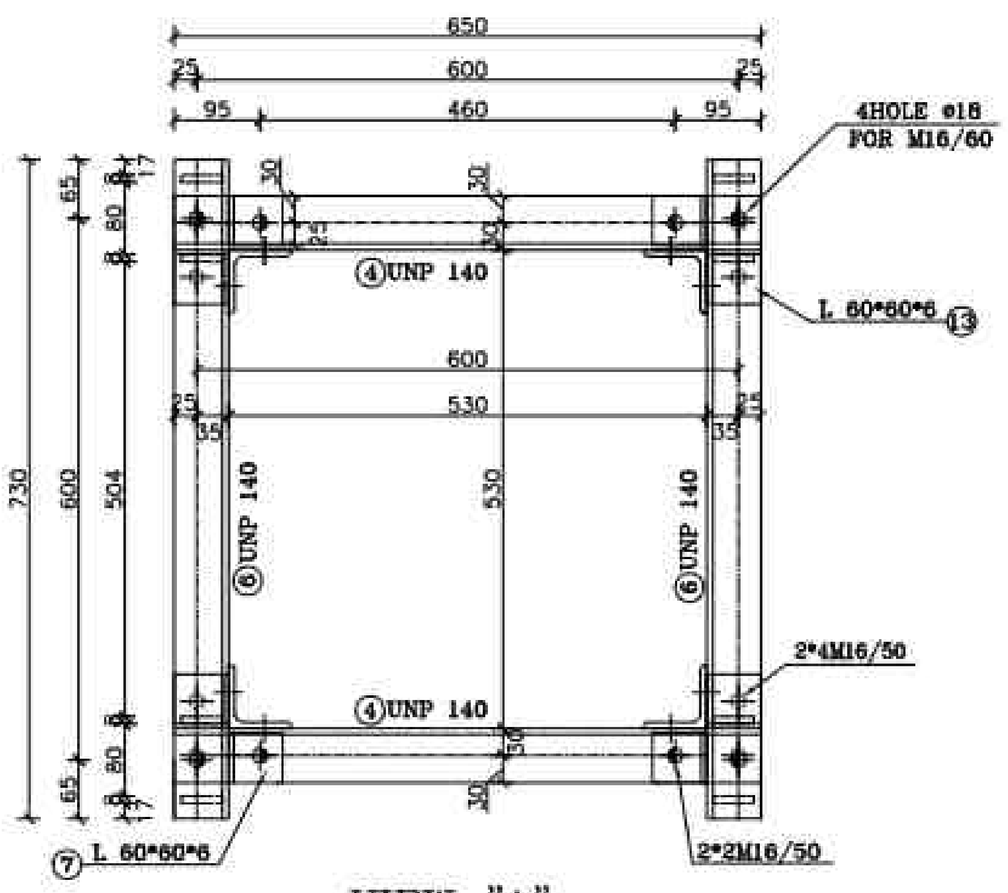


VIEW "A"
SC:1/10

| BOLT LIST STRACTURE | | | |
|---|---|---|---|
| SIZE | QUANTITY | SET | TOTAL |
| M12/40 | 38 | 18 | 684 |
| M16/40 | 8 | 18 | 144 |
| M16/50 | 16 | 18 | 288 |
| BOLT LIST EQUIPMENT | | | |
| M16/60 | 4 | 18 | 72 |

## LISTOFFER STRUCTURE

| POS | SIZE (mm) | Length (m) | QTY PCS | Weight(kg) kg/m | Piece | Total |
|---|---|---|---|---|---|---|
| 1 | L 70*70*7 | 2.840 | 4 | 7.38 | 20.96 | 83.84 |
| 2 | L 40*40*4 | 0.635 | 4 | 2.42 | 1.54 | 6.15 |
| 3 | L 40*40*4 | 0.662 | 20 | 2.42 | 1.60 | 32.04 |
| 4 | UNP: 140 | 0.650 | 2 | 16.00 | 10.40 | 20.80 |
| 5 | L 50*50*5 | 0.510 | 2 | 3.77 | 1.92 | 3.85 |
| 6 | UNP: 140 | 0.730 | 2 | 16.00 | 11.68 | 23.36 |
| 7 | L 60*60*6 | 0.055 | 4 | 5.42 | 0.30 | 1.19 |
| 8 | 1/2PL: 60*45*8 | ------ | 8 | ------ | 0.170 | 1.356 |
| 9 | FPL: 40*40*6 | ------ | 4 | ------ | 0.075 | 0.301 |
| 10 | PL: 120*120*20 | ------ | 4 | ------ | 2.261 | 9.043 |
| 11 | PL: 100*90*6 | ------ | 4 | ------ | 0.424 | 1.696 |
| 11a | PL: 100*100*6 | ------ | 4 | ------ | 0.471 | 1.884 |
| 12 | PL: 793*50*3 | ------ | 2 | ------ | 0.934 | 1.868 |
| 13 | L 60*60*6 | 0.060 | 4 | 5.42 | 0.33 | 1.30 |
| ST-37-2(DIN 17100) | | Total Weight/For Structure | | | 188.67 | |
| SET SITE | | 18 | | | | |
| HOT DIP GALVANIZED | | Total Weight/For project | | | 3,396.08 | |

این جدول فهرست مصالح و اجزاء آلات بوده و جنبه اجرایی ندارد و طولها می بایست مجدداً توسط سازنده کنترل شود.

## REFERENCE

| REFERENCE. TITLE | REFERENCE. No. |
|---|---|
| | |
| | |
| | |
| | |

## NOTES

1- STEEL: ST-37
2-ALL BOLTS ARE GRADE (8.8)
3- ø 12 HOLES (○) ø 22 HOLES (⊕)
ø 13 HOLES (⊖) ø 24 HOLES (⊕)
ø 14 HOLES (⊕) ø 28 HOLES (⊕)
ø 15 HOLES (⊙) ø 30 HOLES (⊕)
ø 18 HOLES (⊕) ø 35 HOLES (⊕)
MECHANISM AXES (⊕)
4- EARTHING HOLES (✱)
(ALL THE HOLES ARE ø14 EXCEPT AS SHOWN)
5- FOR ALL WELDS "D"=6mm EXECEPT AS SHOWN.

## LEGEND

## KEY PLAN

| REV. | DATE | DESCRIPTION | DESIGN | DRAWN | CHECKED | APPROVED |
|---|---|---|---|---|---|---|
| 03 | 05/2026 | ACC TO COMMENT | A.SH | A.B | R.KH | M.DA |
| 02 | 04/2026 | ACC TO COMMENT | A.SH | A.B | R.KH | M.DA |
| 01 | 02/2026 | ACC TO COMMENT | A.SH | A.B | R.KH | M.DA |
| 00 | 01/2026 | ISSUE FOR REVIEW | A.SH | A.B | R.KH | M.DA |

Client:
Consultant: Monenco Iran
Contractor: MOHAM SHARGH CO.
Sub Contractor:

Project: 100MW Solar Power Plant (SARCHESHME)

Title: EQUIPMENT STRUCTURE DRAWING
DRAWING OF EQUIPMENT STRUCTURE 2SCT

| DOC NO.: | 28P2-B-3MC-DWG-SUS-000000-CV-122 | REV. 03 |
|---|---|---|
| SCALE | SIZE | SHEET 14 OF 31 | FORMAT DWG |

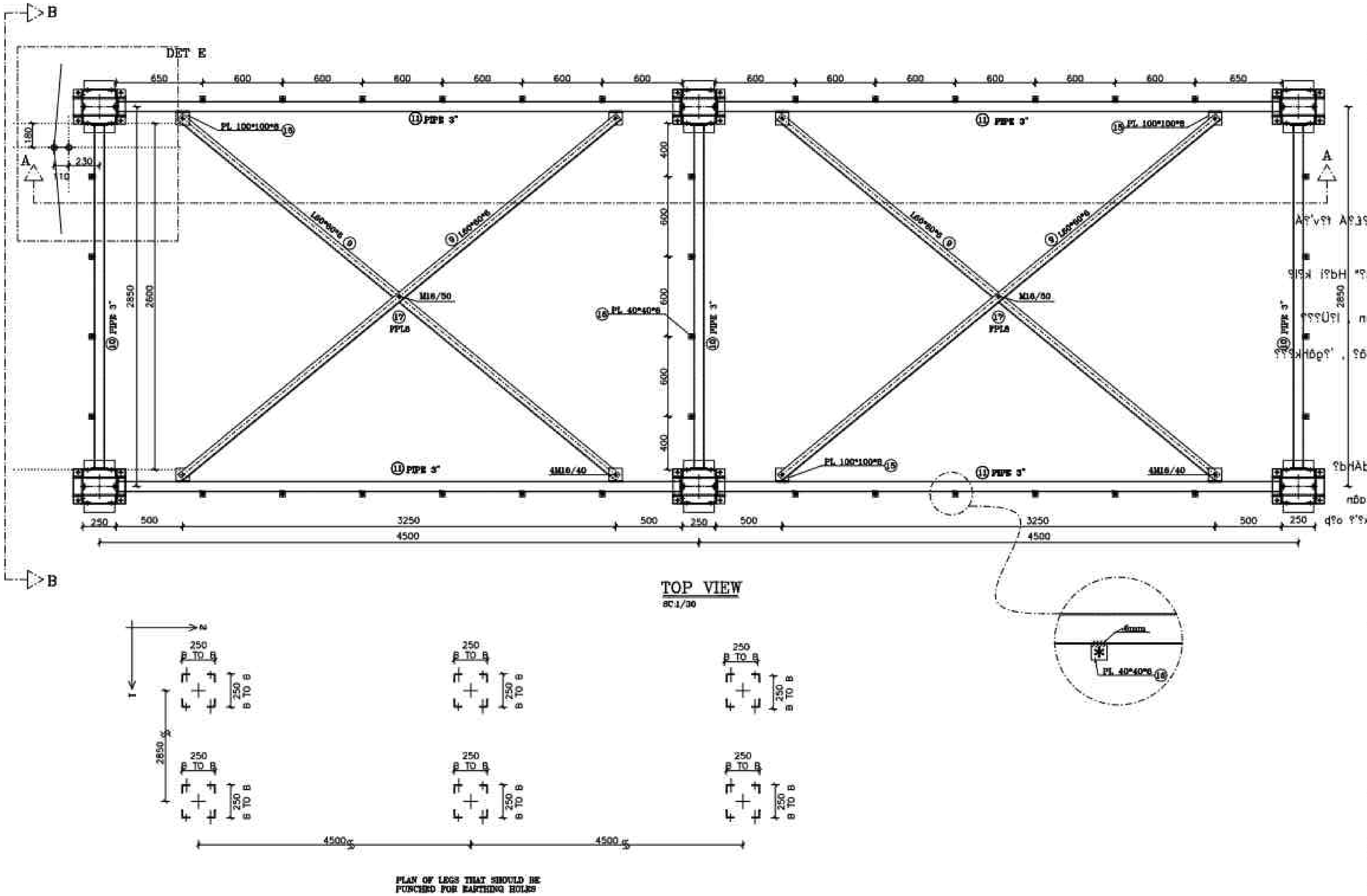


TOP VIEW
SC:1/30

PLAN OF LEGS THAT SHOULD BE PUNCHED FOR EARTHING HOLES




SC:1/10

## REFERENCE

| REFERENCE. TITLE | REFERENCE. No. |
|---|---|
| | |
| | |
| | |
| | |

## NOTES

1- همه ابعاد بر حسب میلیمتر می‌باشد مگر خلاف آن ذکر شود.
2- تمامی قطعات از جنس فولاد ساختمانی می‌باشد.
3- پیچ و مهره‌ها از نوع پرمقاومت می‌باشد.
4- تمامی قطعات فولادی با روش گرم غوطه‌ور (Hot Dip Galvanized) گالوانیزه می‌شوند.
5- جوش‌ها از نوع گوشه می‌باشد مگر خلاف آن ذکر شود.
6- سوراخ‌کاری‌ها با مته انجام می‌شود و استفاده از پانچ مجاز نمی‌باشد.
7- جوش‌کاری‌ها توسط جوشکار دارای گواهینامه معتبر انجام می‌شود.
8- سوراخ‌کاری‌ها با دقت کافی انجام می‌شود و از پانچ استفاده نمی‌شود.
9- پس از جوشکاری، تمامی محل‌های جوش باید تمیز و آماده رنگ‌آمیزی شوند.
10- پس از نصب، تمامی پیچ‌ها باید با آچار دینامومتری سفت شوند.
11- سازه باید طبق نقشه‌های اجرایی و دستورالعمل‌های فنی اجرا شود.
12- هرگونه تغییر در طراحی باید با هماهنگی مهندس طراح انجام شود.
13- رنگ‌آمیزی سازه‌ها طبق مشخصات فنی پروژه انجام می‌شود.
14- کنترل کیفیت جوش‌ها توسط آزمایشگاه معتبر انجام می‌شود.

| | | |
|---|---|---|
| ASTM A123/A153 | layout | REV.07 |
| NSA245/315D | | |
| HSB285422-6 | | |
| HSB285422-N | | |

| ضخامت قطعات (mm) | حداقل طول جوش (mm) | حداقل فاصله جوش (mm) |
|---|---|---|
| t>6mm | 85 | 150 |
| 3<t≤6mm | 70 | 90 |
| 1.5<t≤3mm | 55 | 80 |

## LEGEND

1- STEEL: ST-37
2-ALL BOLTS ARE GRADE: (8.8)
3- • 12 HOLES (○) • 22 HOLES (⊕)
• 13 HOLES (⊖) • 24 HOLES (⊕)
• 14 HOLES (⊕) • 28 HOLES (⊕)
• 15 HOLES (⊕) • 30 HOLES (⊕)
• 16 HOLES (⊕) • 35 HOLES (⊕)
MECHANISM AXES (⊕)
4- EARTHING HOLES (✱)
(ALL THE HOLES ARE ø14 EXCEPT AS SHOWN)
5- FOR ALL WELDS "D"=6mm EXECEPT AS SHOWN. D

## KEY PLAN

| REV. | DATE | DESCRIPTION | DESIGN | DRAWN | CHECKED | APPROVED |
|---|---|---|---|---|---|---|
| 03 | 05/2026 | ACC TO COMMENT | A.SH | A.B | R.KH | M.DA |
| 02 | 04/2026 | ACC TO COMMENT | A.SH | A.B | R.KH | M.DA |
| 01 | 02/2026 | ACC TO COMMENT | A.SH | A.B | R.KH | M.DA |
| 00 | 01/2026 | ISSUE FOR REVIEW | A.SH | A.B | R.KH | M.DA |

Client:

Consultant: مونتکو ایران Monenco Iran

Contractor: MOHAM SHARGH CO.

Sub Contractor:

Project: 100MW Solar Power Plant (SARCHESHME)

Title: EQUIPMENT STRUCTURE DRAWING
DRAWING OF EQUIPMENT STRUCTURE 2DS1

| DOC NO.: | 28P2-B-3MG-DWG-SUS-000000-CV-122 | REV. 03 |
|---|---|---|

| SCALE | SIZE | SHEET | FORMAT |
|---|---|---|---|
| | | 15 OF 31 | DWG |

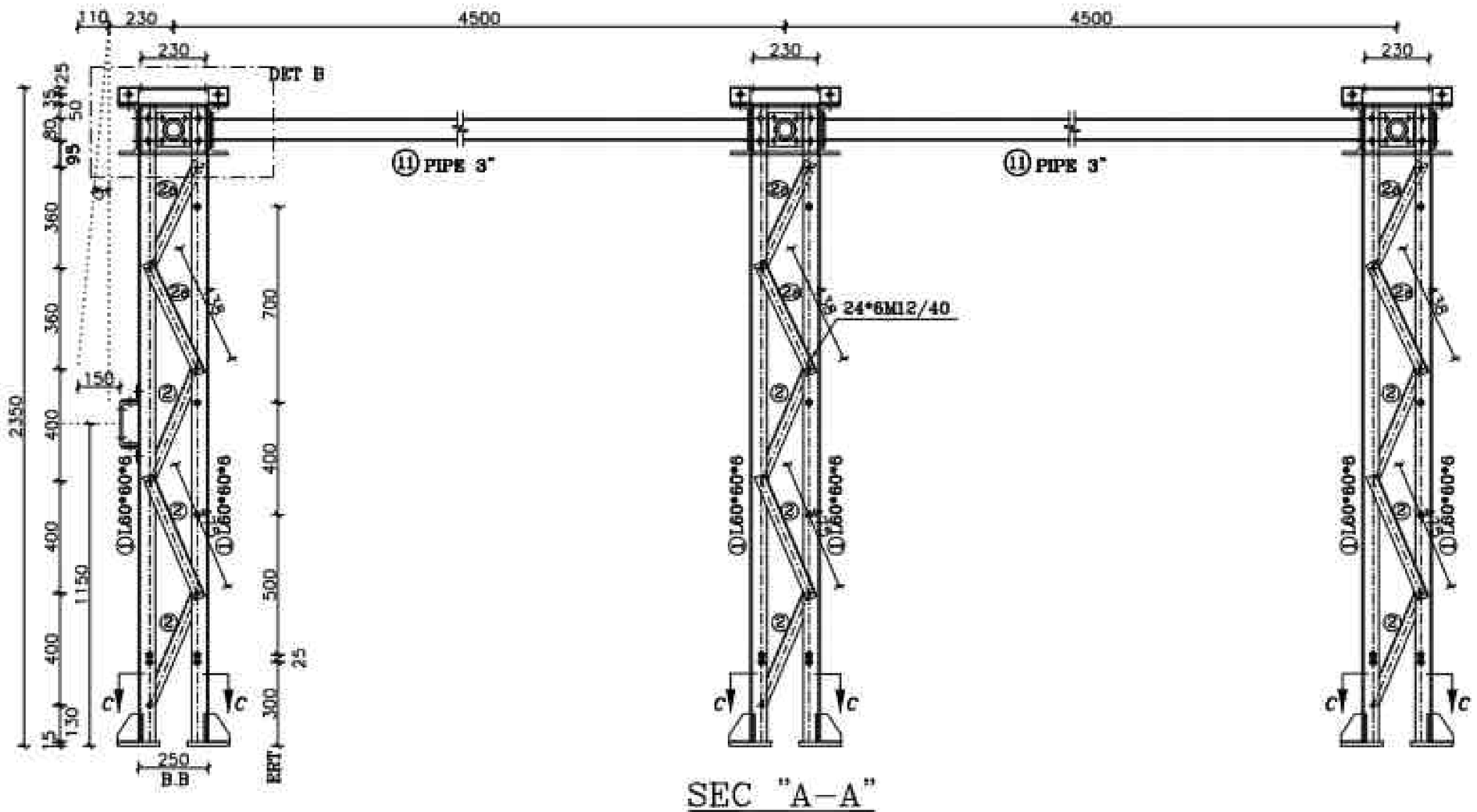


SEC "A–A"
SC:1/25

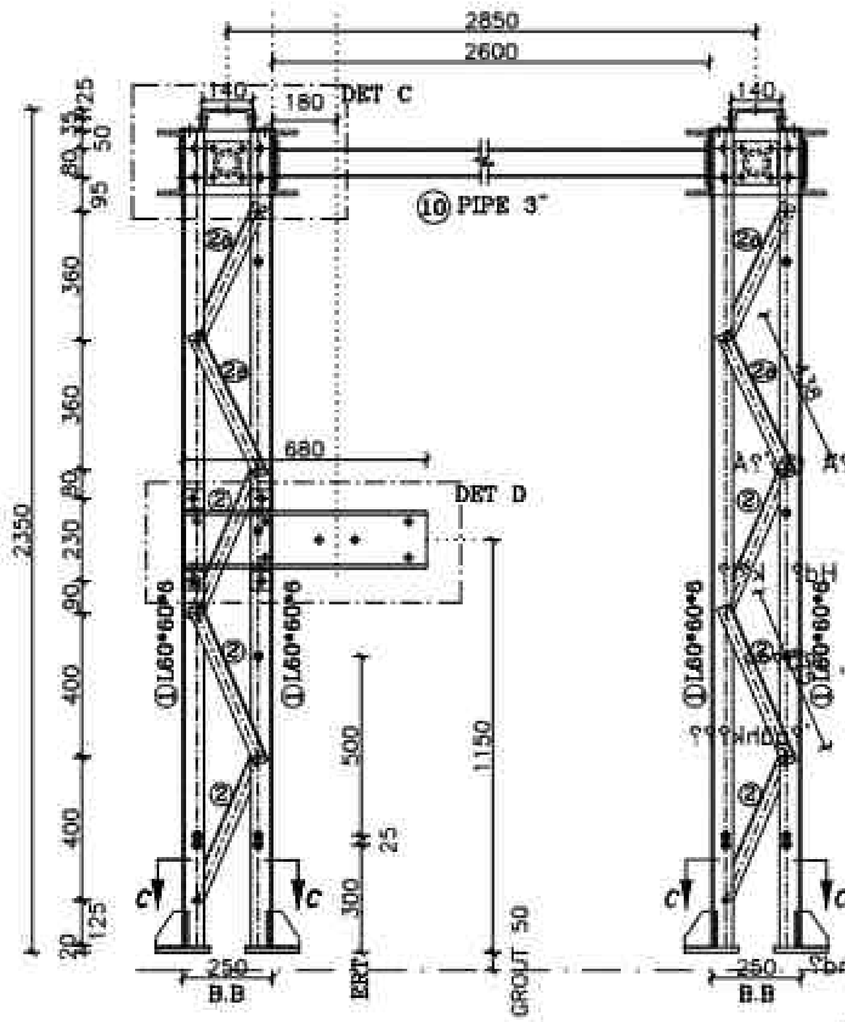


SEC "B–B"
SC:1/25

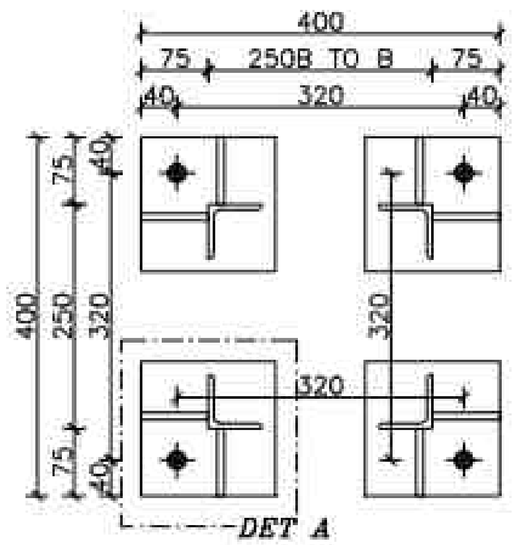


SEC "C–C"
SC:1/10

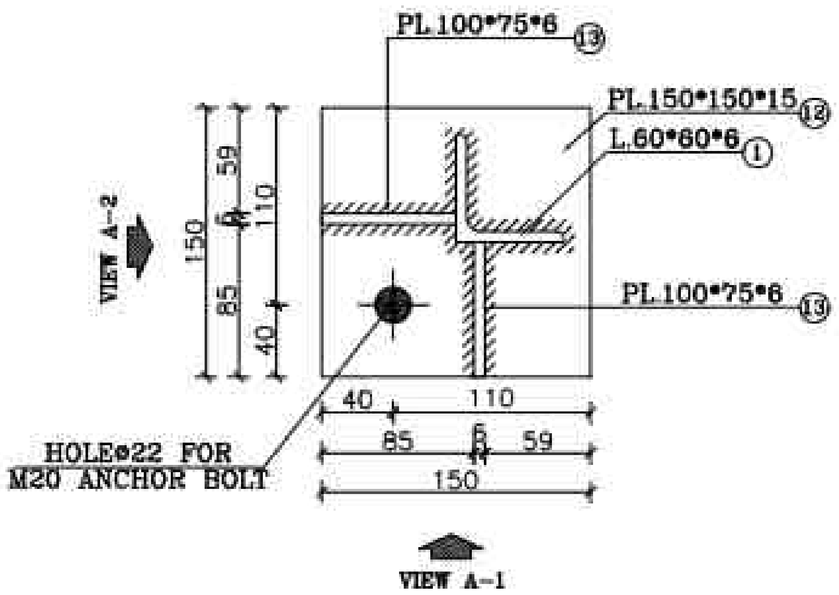


DET "A"
SC:1/5

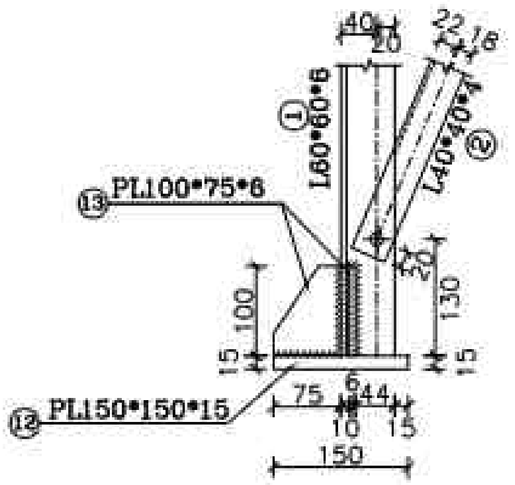


VIEW "A–1"
SC:1/10

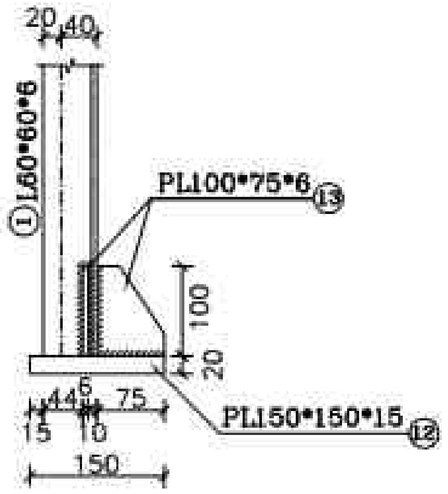


VIEW "A–2"
SC:1/10

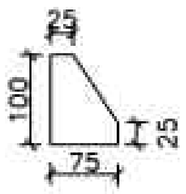


POS 13 : PL100*75*6
SC:1/10

## REFERENCE

| REFERENCE. TITLE | REFERENCE. No. |
|---|---|
| | |
| | |
| | |
| | |

## NOTES

1– ASTM A123,A153

2– NSA245/3M50D
HSB285422–6
HSB285422–N

3– 12 HOLES (○) 22 HOLES (⊕)
13 HOLES (⊖) 24 HOLES (⊕)
14 HOLES (⊕) 26 HOLES (⊕)
15 HOLES (⊕) 30 HOLES (⊕)
16 HOLES (⊕) 35 HOLES (⊕)
MECHANISM AXES (⊕)

4– EARTHING HOLES (✱)
(ALL THE HOLES ARE ⊘14 EXCEPT AS SHOWN)

5– FOR ALL WELDS "D"=6mm EXCEPT AS SHOWN. D

| | | |
|---|---|---|
| t>6mm | 85 | 150 |
| 3<t≤6mm | 70 | 90 |
| 1.5<t≤3mm | 55 | 60 |

## LEGEND

1– STEEL: ST–37
2–ALL BOLTS ARE GRADE: (8.8)

## KEY PLAN

| REV. | DATE | DESCRIPTION | DESIGN | DRAWN | CHECKED | APPROVED |
|---|---|---|---|---|---|---|
| 03 | 05/2026 | ACC TO COMMENT | A.SH | A.B | R.KH | M.DA |
| 02 | 04/2026 | ACC TO COMMENT | A.SH | A.B | R.KH | M.DA |
| 01 | 02/2026 | ACC TO COMMENT | A.SH | A.B | R.KH | M.DA |
| 00 | 01/2026 | ISSUE FOR REVIEW | A.SH | A.B | R.KH | M.DA |

Client:

Consultant: Monenco Iran

Contractor: MOHAM SHARGH CO.

Sub Contractor:

Project: 100MW Solar Power Plant (SARCHESHME)

Title: EQUIPMENT STRUCTURE DRAWING
DRAWING OF EQUIPMENT STRUCTURE 2DS1

| DOC NO.: | 28P2–B–3MG–DWG–SUS–000000–CV–122 | REV. 03 |
|---|---|---|

| SCALE | SIZE | SHEET | FORMAT |
|---|---|---|---|
| | | 16 OF 31 | DWG |

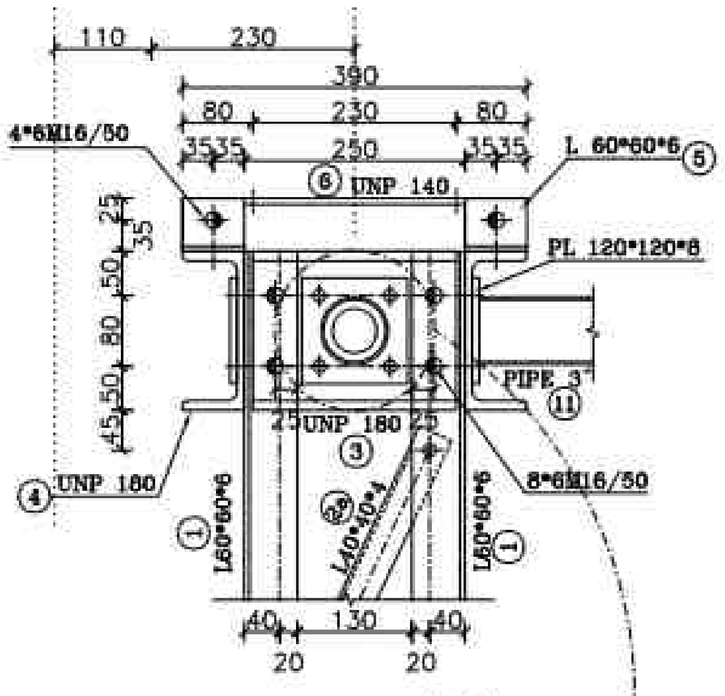


DETAIL "B"
SC:1/10

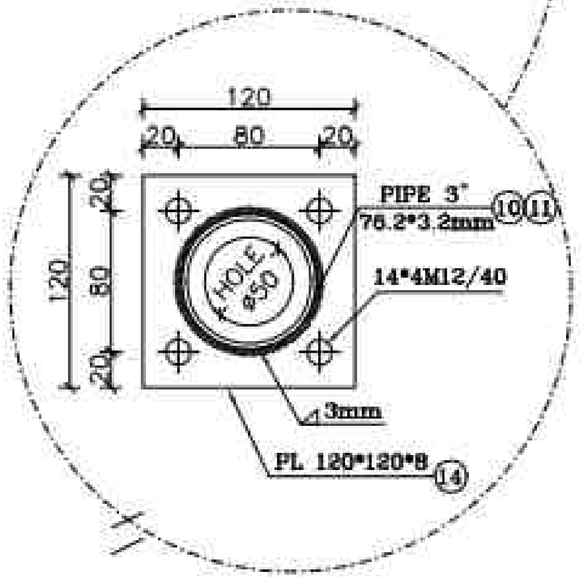


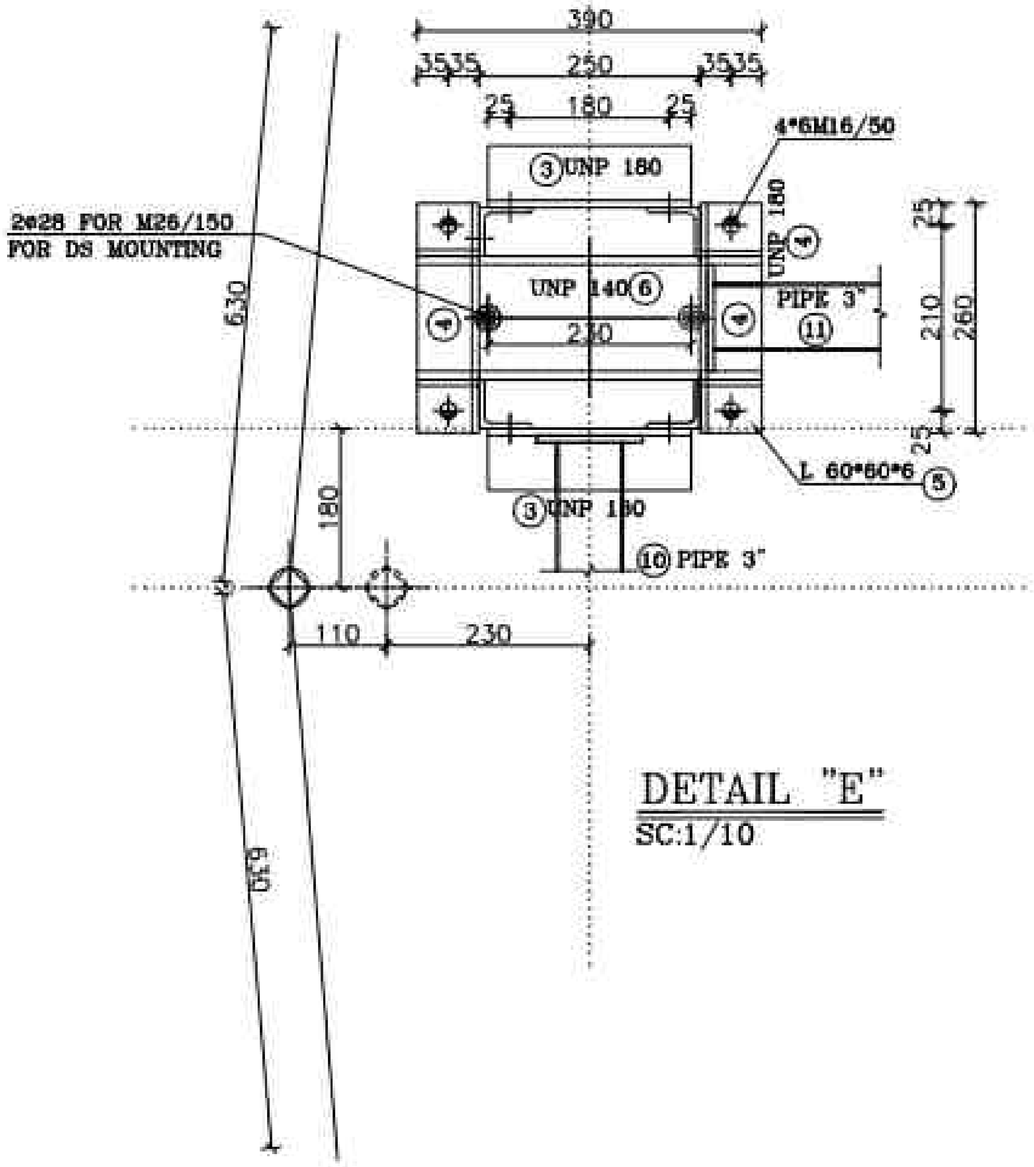


DETAIL "E"
SC:1/10

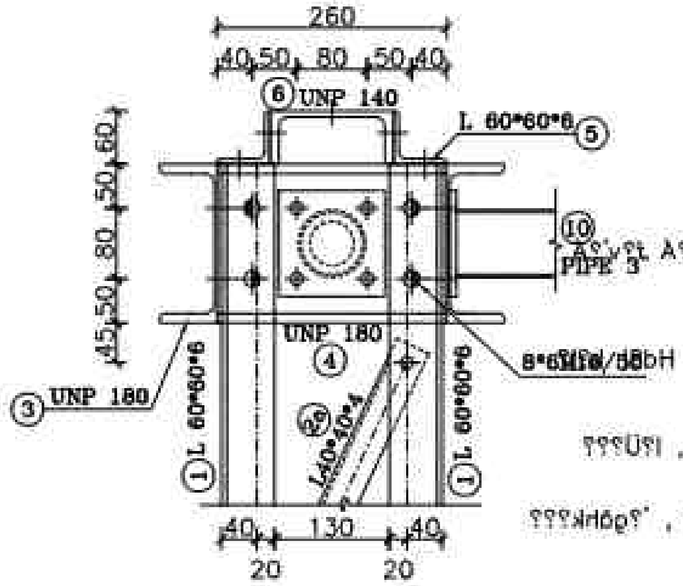


DETAIL "C"
SC:1/10

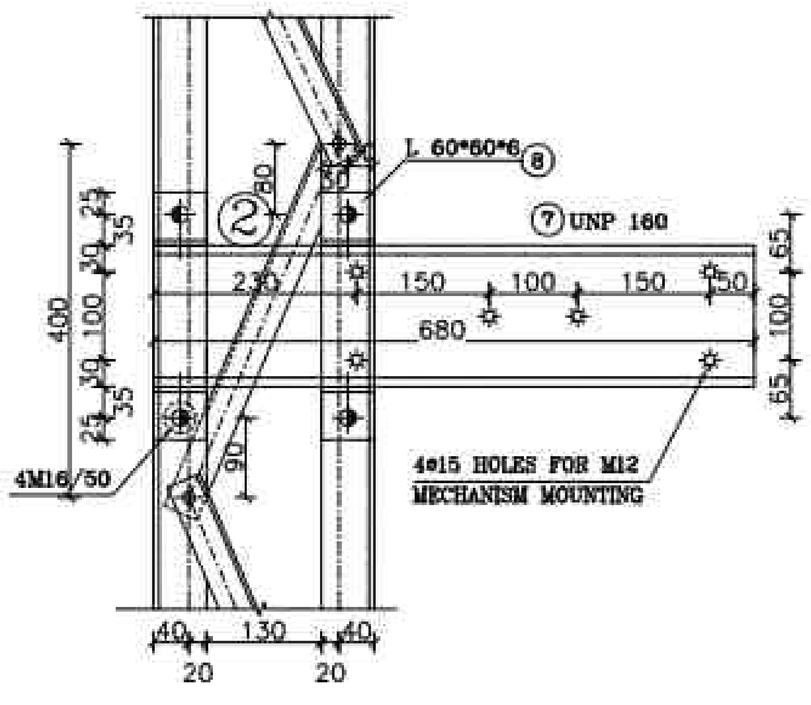


DETAIL "D"
SC:1/10

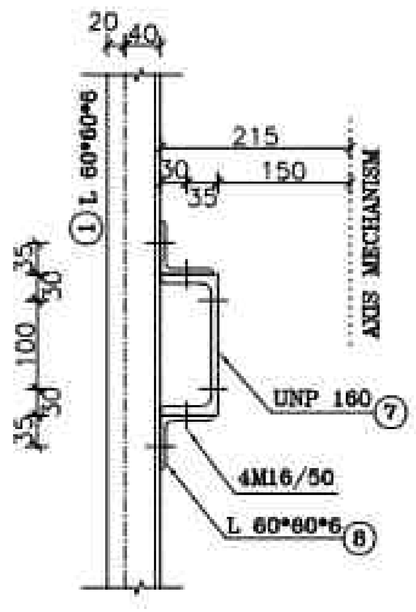


VIEW C
SC:1/10

| BOLT LIST STRACTURE | | | |
|---|---|---|---|
| SIZE | QUANTITY | SET | TOTAL |
| M12/40 | 144 | 8 | 1152 |
| M16/40 | 8 | 8 | 64 |
| M16/50 | 152 | 8 | 1216 |
| BOLT LIST EQUIPMENT | | | |
| M26/150 | 12 | 8 | 96 |
| M12/50 | 4 | 8 | 32 |

## MATERIAL LIST

| POS | SIZE (mm) | Length (m) | QTY PCS | Weight(kg) kg/m | Piece | Total |
|---|---|---|---|---|---|---|
| 1 | L 60*60*6 | 2.275 | 24 | 5.42 | 12.33 | 295.93 |
| 2 | L 40x40x4 | 0.475 | 72 | 2.42 | 1.15 | 82.76 |
| 2a | L 40x40x4 | 0.438 | 48 | 2.42 | 1.06 | 50.88 |
| 3 | UNP 180 | 0.230 | 12 | 22.00 | 5.06 | 60.72 |
| 4 | UNP 180 | 0.260 | 12 | 22.00 | 5.72 | 68.64 |
| 5 | L 60*60*6 | 0.070 | 24 | 5.42 | 0.38 | 9.11 |
| 6 | UNP 140 | 0.390 | 6 | 16.00 | 6.24 | 37.44 |
| 7 | UNP 160 | 0.680 | 1 | 18.80 | 12.78 | 12.78 |
| 8 | L 60*60*6 | 0.060 | 4 | 5.42 | 0.33 | 1.30 |
| 9 | L 60*60*6 | 4.260 | 4 | 5.42 | 23.09 | 92.36 |
| 10 | PIPE 3" | 2.568 | 3 | 5.82 | 14.95 | 44.84 |
| 11 | PIPE 3" | 4.218 | 4 | 5.82 | 24.55 | 98.20 |
| 12 | PL 150*150x15 | —— | 24 | —— | 2.640 | 63.360 |
| 13 | PL 100x75x6 | —— | 48 | —— | 0.353 | 16.956 |
| 14 | PL 120*120*8 | —— | 14 | —— | 0.904 | 12.660 |
| 15 | PL 100*100*8 | —— | 8 | —— | 0.628 | 5.024 |
| 16 | PL40*40*6 | —— | 36 | —— | 0.075 | 2.713 |
| 17 | FPL60*60*8 | —— | 2 | —— | 0.226 | 0.452 |
| ST-37-2(DIN 17100) | | Total Weight/For Structure | | | | 956.12 |
| SET SITE | | | 8 | | | |
| HOT DIP GALVANIZED | | Total Weight/For project | | | | 7,648.95 |

این جدول فهرست مصالح و آهن آلات بوده و جنبه تجزیی ندارد و طولها می بایست مجددا توسط سازنده کنترل شود.

## REFERENCE

| REFERENCE. TITLE | REFERENCE. No. |
|---|---|
| | |
| | |
| | |
| | |

## NOTES

1- STEEL: ST-37
2-ALL BOLTS ARE GRADE: (8.8)
3- • 12 HOLES (○) • 22 HOLES (⊕)
• 13 HOLES (⊖) • 24 HOLES (⊕)
• 14 HOLES (⊕) • 28 HOLES (⊕)
• 15 HOLES (⊕) • 30 HOLES (⊕)
• 16 HOLES (⊕) • 35 HOLES (⊕)
MECHANISM AXES (⊕)
4- EARTHING HOLES (✱)
(ALL THE HOLES ARE ø14 EXCEPT AS SHOWN)
5- FOR ALL WELDS "D"=6mm EXCEPT AS SHOWN. D

## LEGEND

## KEY PLAN

| REV. | DATE | DESCRIPTION | DESIGN | DRAWN | CHECKED | APPROVED |
|---|---|---|---|---|---|---|
| 03 | 05/2026 | ACC TO COMMENT | A.SH | A.B | R.KH | M.DA |
| 02 | 04/2026 | ACC TO COMMENT | A.SH | A.B | R.KH | M.DA |
| 01 | 02/2026 | ACC TO COMMENT | A.SH | A.B | R.KH | M.DA |
| 00 | 01/2026 | ISSUE FOR REVIEW | A.SH | A.B | R.KH | M.DA |

Client:
Consultant: Monenco Iran
Contractor: MOHAM SHARGH CO.
Sub Contractor:

Project: 100MW Solar Power Plant (SARCHESHME)

Title: EQUIPMENT STRUCTURE DRAWING
DRAWING OF EQUIPMENT STRUCTURE 2DS1

| DOC NO.: | 28P2-B-3MG-DWG-SUS-000000-CV-122 | REV. 03 |
|---|---|---|
| SCALE | SIZE | SHEET 17 OF 31 | FORMAT DWG |

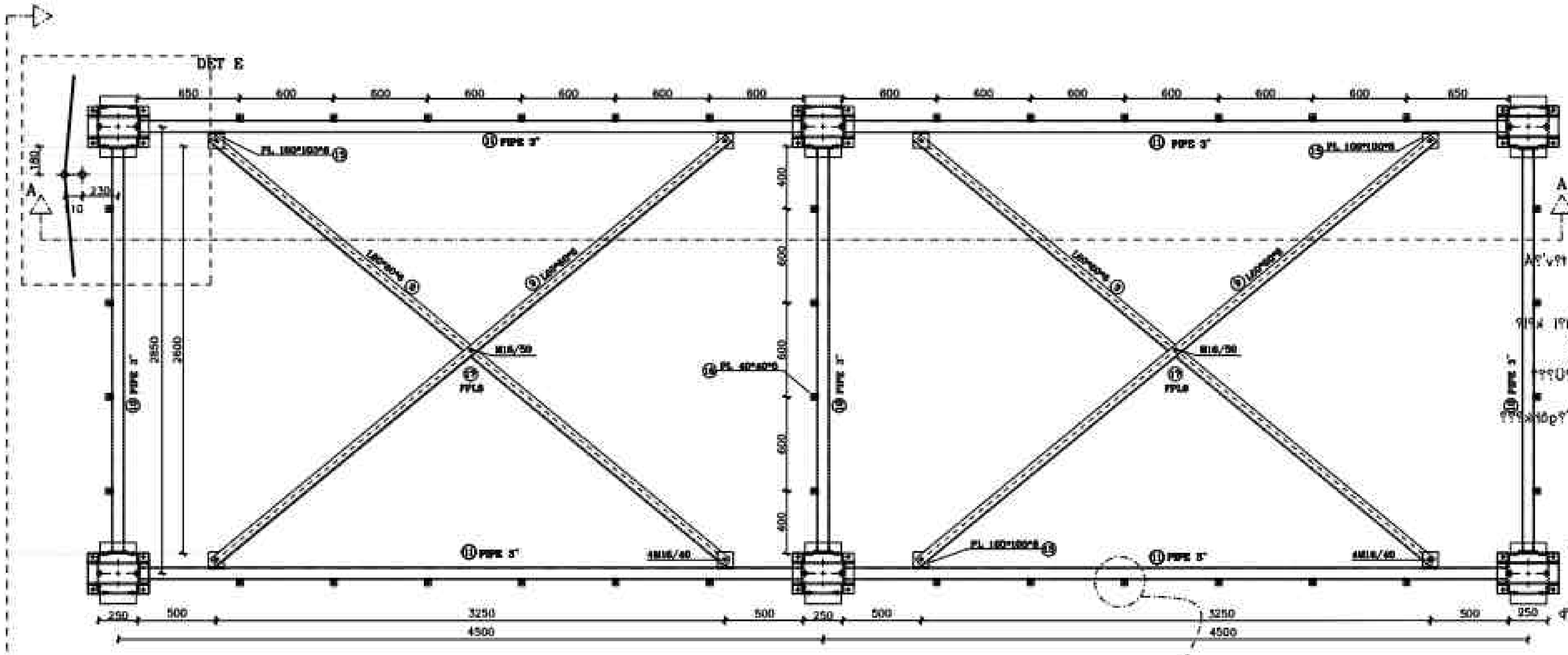


TOP VIEW
SCALE:1/30

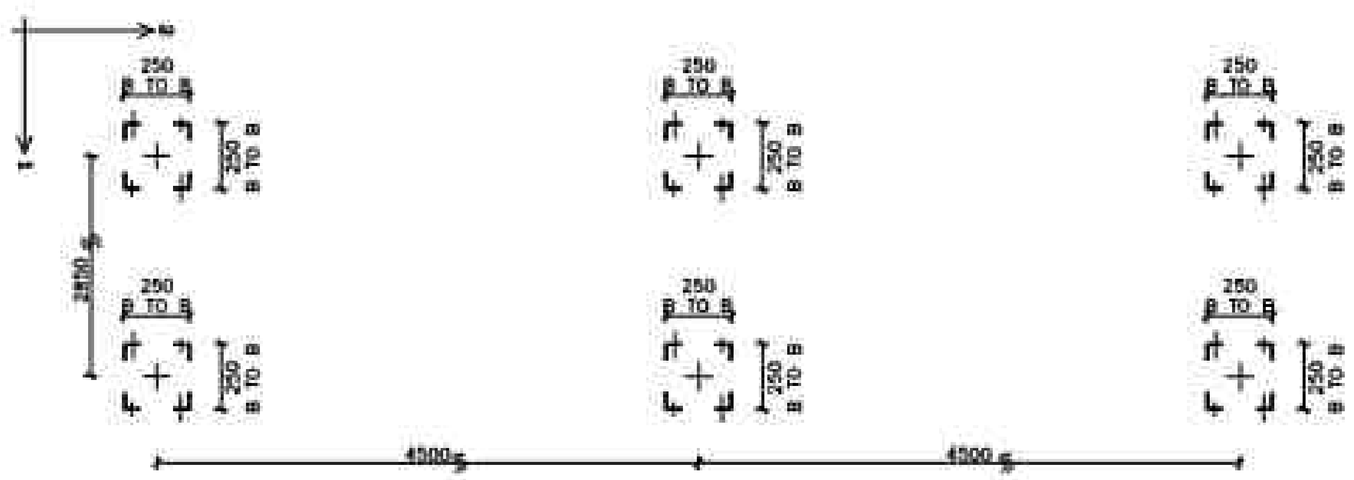


PLAN OF LEGS THAT SHOULD BE PUNCHED FOR EARTHING HOLES

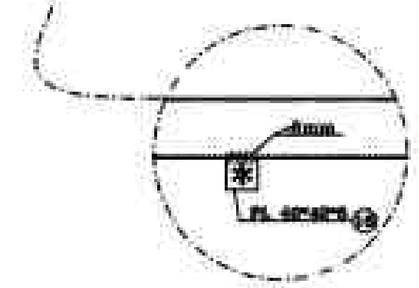


HSB285422-N NSA245/31500

## REFERENCE

| REFERENCE TITLE | REFERENCE No. |
|---|---|
| | |
| | |
| | |
| | |

## NOTES

1- STEEL: ST-37
2-ALL BOLTS ARE GRADE: (8.8)
3- # 12 HOLES (○) # 22 HOLES (✚)
# 13 HOLES (⊖) # 24 HOLES (✚)
# 14 HOLES (✚) # 28 HOLES (✚)
# 15 HOLES (⊕) # 30 HOLES (✚)
# 18 HOLES (✚) # 35 HOLES (✚)
MECHANISM AXES (✚)
4- EARTHING HOLES (✱)
(ALL THE HOLES ARE #14 EXCEPT AS SHOWN)
5- FOR ALL WELDS "D"=6mm EXCEPT AS SHOWN. D

## KEY PLAN

| REV | DATE | DESCRIPTION | DESIGN | DRAWN | CHECKED | APPROVED |
|---|---|---|---|---|---|---|
| 03 | 05/2026 | ACC TO COMMENT | A.SH | A.B | R.KH | M.DA |
| 02 | 04/2026 | ACC TO COMMENT | A.SH | A.B | R.KH | M.DA |
| 01 | 02/2026 | ACC TO COMMENT | A.SH | A.B | R.KH | M.DA |
| 00 | 01/2026 | ISSUE FOR REVIEW | A.SH | A.B | R.KH | M.DA |

Client:

Consultant: Moganco Iran

Contractor: MOHAN SHARGH CO.

Sub Contractor:

Project: 10MW Solar Power Plant (SHAHTEMOUR)

Title: EQUIPMENT STRUCTURE DRAWING
DRAWING OF EQUIPMENT STRUCTURE 2DS1

| DOC NO.: | 28P2-B-3MG-DWG-SUS-000000-CV-122 | REV. 03 |
|---|---|---|

| SCALE | SIZE | SHEET | FORMAT |
|---|---|---|---|
| | | 18 OF 31 | |

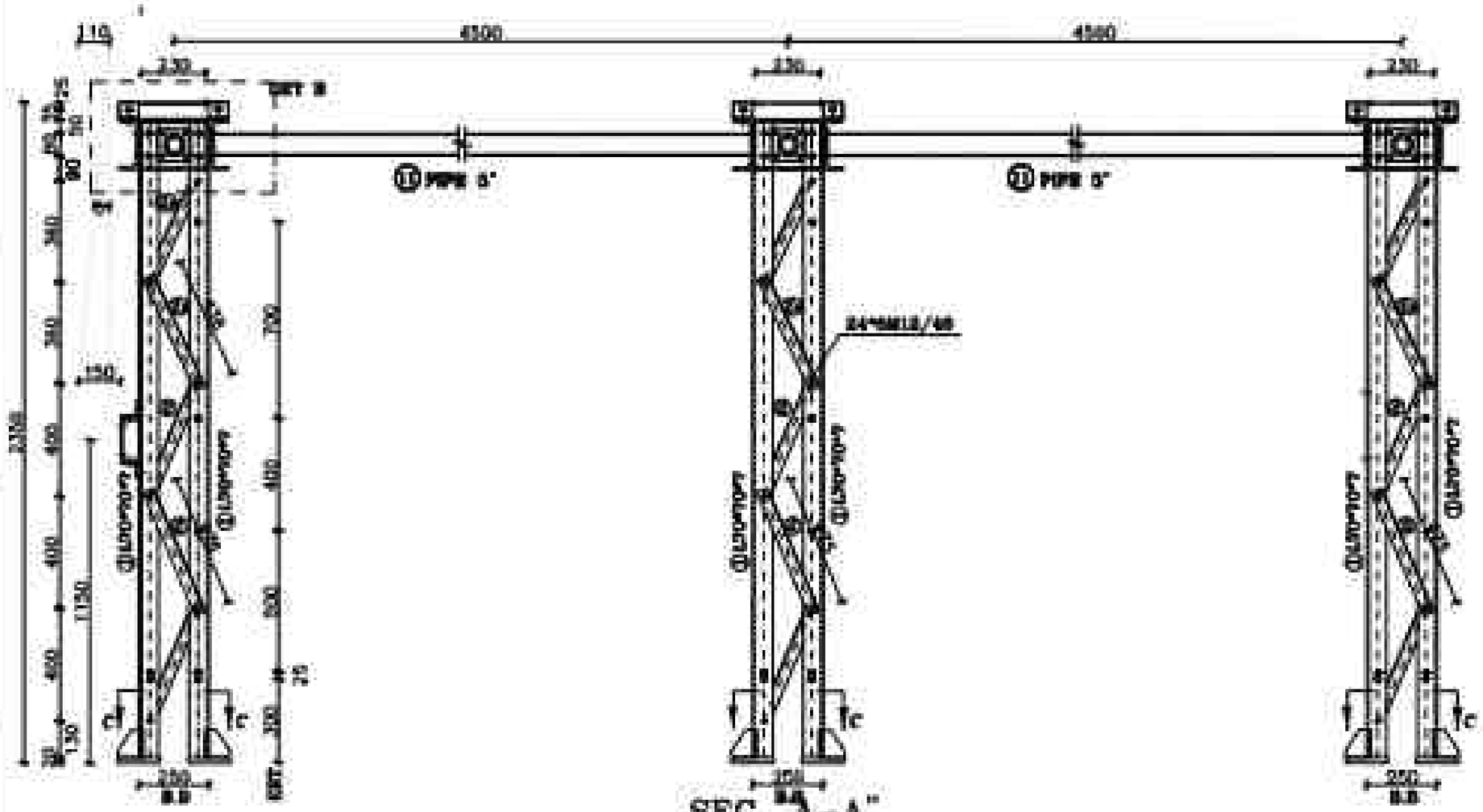


SEC "A-A"
SC:1/20

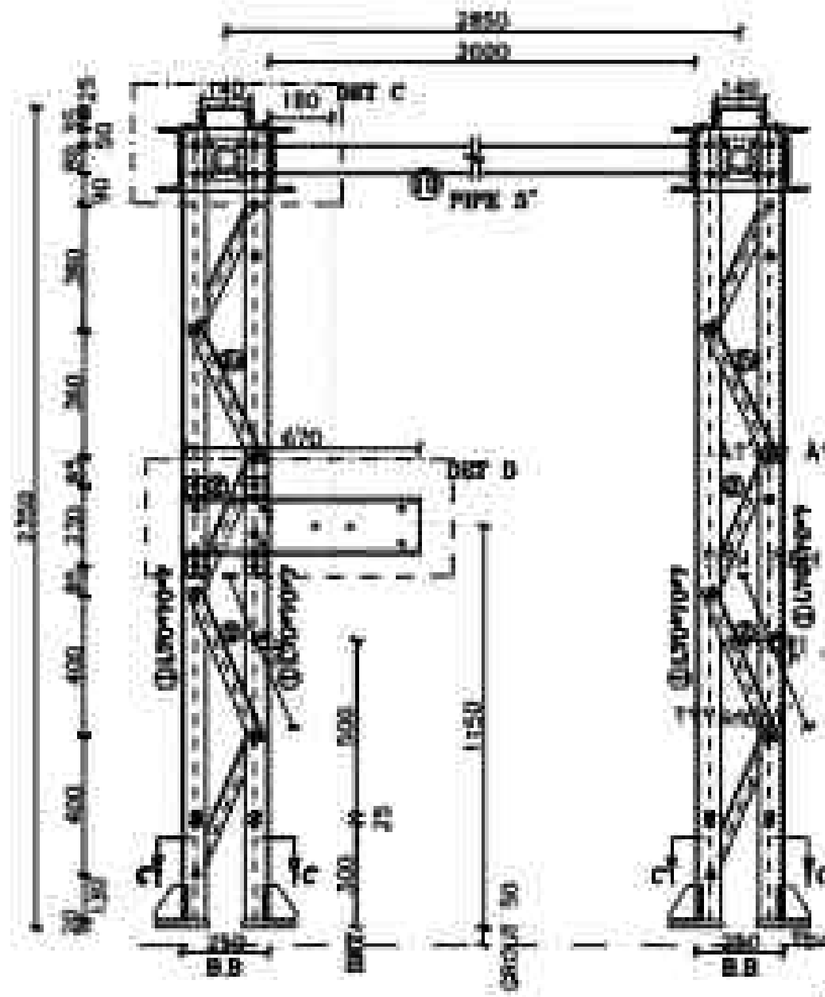


SEC "B-B"
SC:1/20

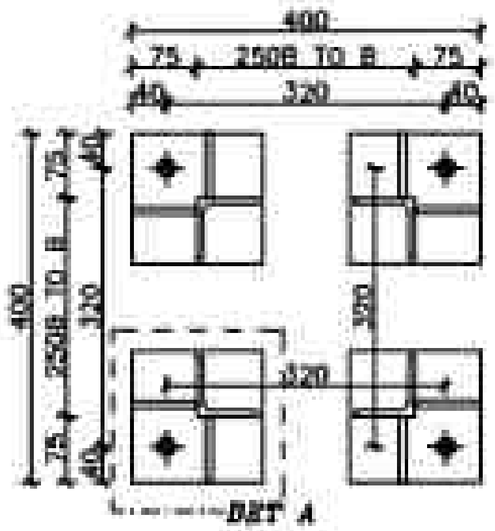


SEC "C-C"
SC:1/10

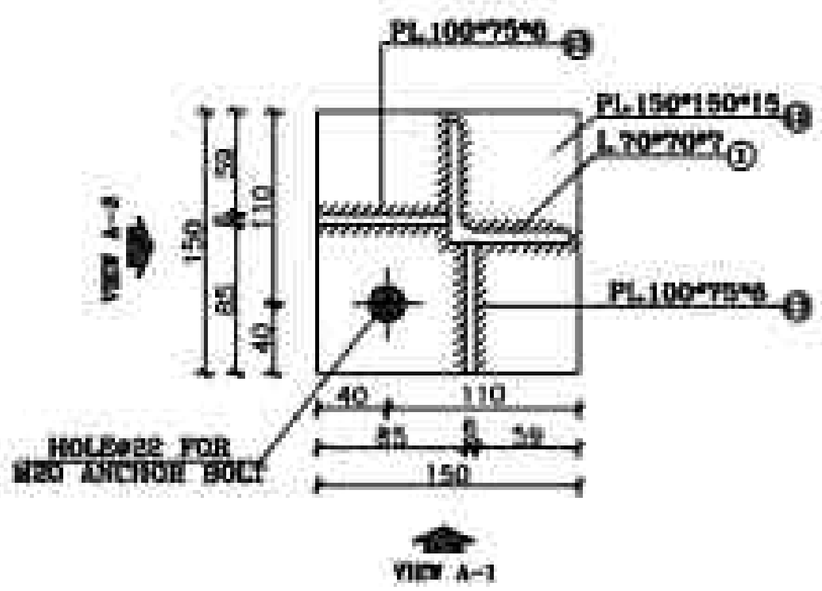


DET "A"
SC:1/5

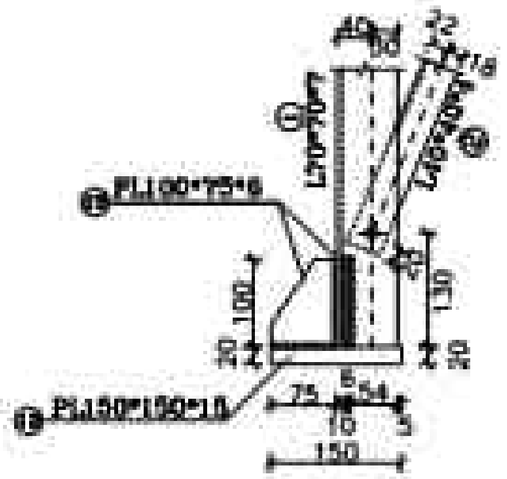


VIEW "A-1"
SC:1/10

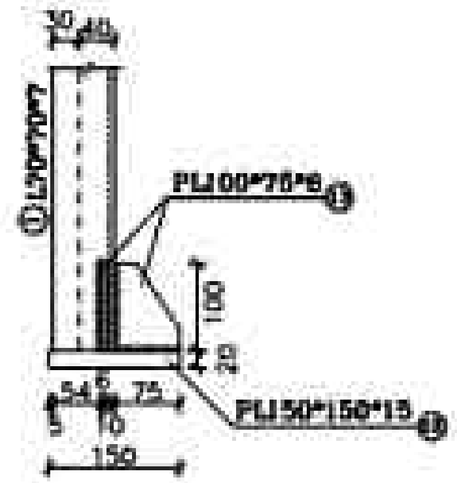


VIEW "A-2"
SC:1/10

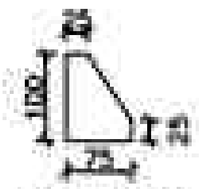


POS 13 : PL100*75*6
SC:1/10

## REFERENCE

| REFERENCE TITLE | REFERENCE No. |
|---|---|
| | |
| | |
| | |
| | |

## NOTES

[illegible]

| [illegible] | [illegible] | [illegible] |
|---|---|---|
| [illegible] | [illegible] | [illegible] |
| [illegible] | [illegible] | [illegible] |
| [illegible] | [illegible] | [illegible] |

## LEGEND

[illegible]

## KEY PLAN

| | | | | | | |
|---|---|---|---|---|---|---|
| [illegible] | [illegible] | ACC TO COMMENT | A.SH | A.B | R.KH | M.SA |
| [illegible] | [illegible] | ACC TO COMMENT | A.SH | A.B | R.KH | M.SA |
| [illegible] | [illegible] | ACC TO COMMENT | A.SH | A.B | R.KH | M.SA |
| [illegible] | [illegible] | ISSUE FOR REVIEW | A.SH | A.B | R.KH | M.SA |
| [illegible] | [illegible] | [illegible] | [illegible] | [illegible] | [illegible] | [illegible] |

Client:

Consultant:

Contractor: MOHAN IRANIAN CO.

Project: [illegible] Solar Power Plant [illegible]

Title: EQUIPMENT STRUCTURE DRAWING
DRAWING OF EQUIPMENT STRUCTURE 2051

| DOC NO.: | [illegible] | REV. [illegible] |
|---|---|---|
| SCALE | SIZE | SHEET 15 OF 31 | FORMAT [illegible] |

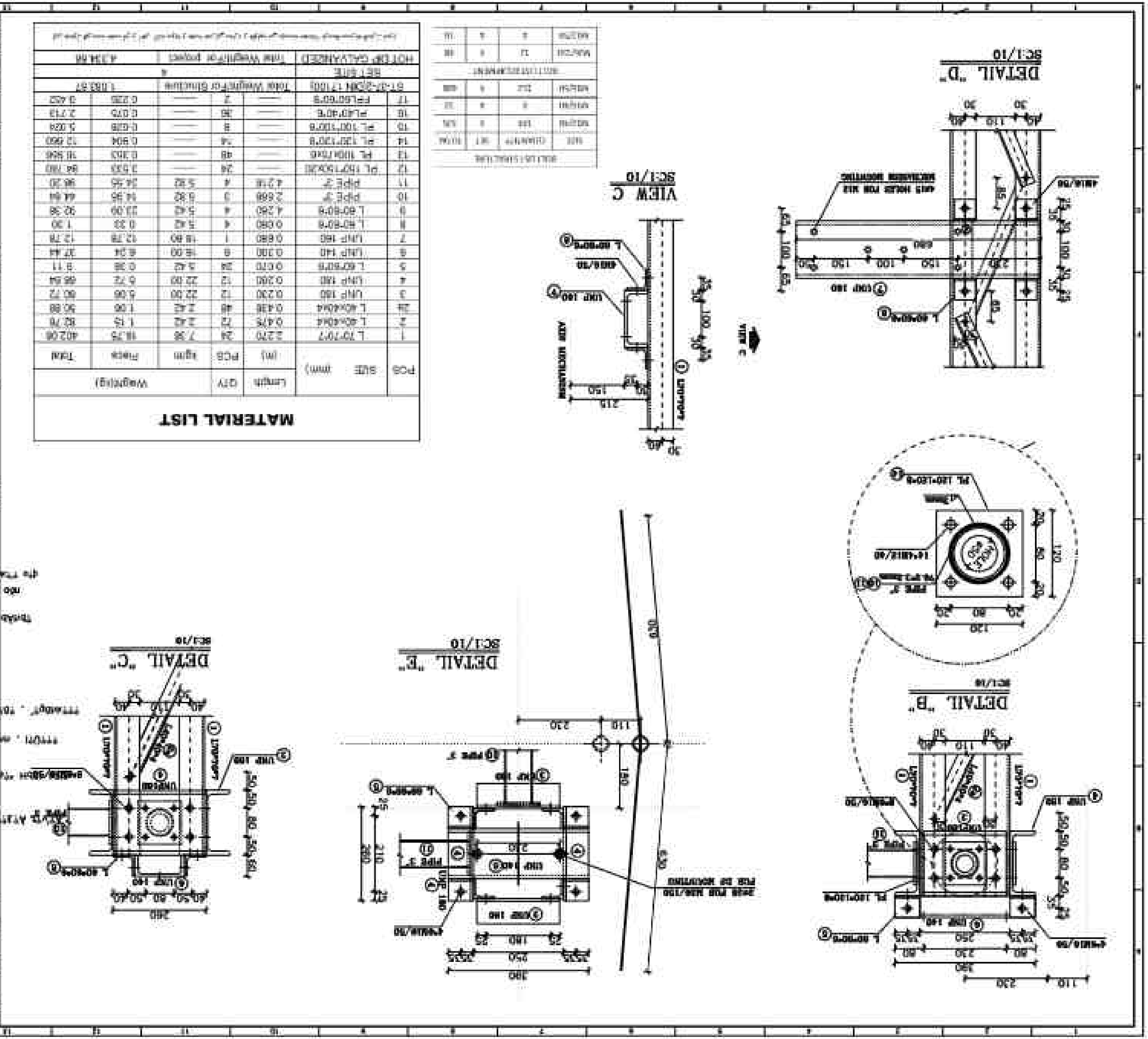


## MATERIAL LIST

| POS | SIZE (mm) | Length (mm) | QTY PCS | Weight(kg) kg/m | Weight(kg) Piece | Total |
|---|---|---|---|---|---|---|
| 1 | L 70*70*7 | 2,270 | 24 | 7.36 | 16.75 | 402.06 |
| 2 | L 40*40*4 | 0.475 | 72 | 2.42 | 1.15 | 82.76 |
| 24 | L 40*40*4 | 0.438 | 48 | 2.42 | 1.06 | 50.88 |
| 3 | UNP 160 | 0.230 | 12 | 22.00 | 5.06 | 60.72 |
| 4 | UNP 160 | 0.260 | 12 | 22.00 | 5.72 | 68.64 |
| 5 | L 60*60*6 | 0.670 | 24 | 5.42 | 3.63 | 87.11 |
| 6 | UNP 140 | 0.200 | 8 | 16.00 | 3.20 | 25.60 |
| 7 | UNP 140 | 0.880 | 1 | 16.00 | 14.08 | 14.08 |
| 8 | L 60*60*6 | 0.080 | 4 | 5.42 | 0.43 | 1.73 |
| 9 | L 60*60*6 | 4.260 | 4 | 5.42 | 23.09 | 92.36 |
| 10 | PIPE 3" | 2.668 | 3 | 6.82 | 18.19 | 54.57 |
| 11 | PIPE 3" | 4.216 | 4 | 6.82 | 28.76 | 115.04 |
| 12 | PL 150*150*30 | 3.533 | 24 | ——— | 84.79 | 2,034.96 |
| 13 | PL 100*100*6 | 0.785 | 48 | ——— | 6.28 | 301.44 |
| 14 | PL 120*120*6 | 0.904 | 24 | ——— | 7.23 | 173.52 |
| 15 | PL 100*100*6 | 0.628 | 8 | ——— | 4.93 | 39.44 |
| 16 | PL 100*100*6 | 0.628 | 36 | ——— | 4.93 | 177.48 |
| 17 | FPL60*60*6 | 0.235 | 2 | ——— | 1.84 | 3.68 |
| | STD-2DHH (T100) | Total Weight For Structure | | | 1,882.87 | |
| | SET SITE | 4 | | | | |
| | HOT DIP GALVANIZED | Total Weight For Project | | | 4,234.84 | |

| MARK | QUANTITY | SET | TOTAL |
|---|---|---|---|
| SOLID GRAVEL STRUCTURE | | | |
| M01/01 | 144 | 4 | 576 |
| M01/02 | 4 | 4 | 16 |
| M01/03 | 32 | 4 | 128 |
| M01/04 | 2,24 | 4 | 896 |
| NON STANDARD MARK | | | |
| M02/01 | 4 | 4 | 16 |
| M02/02 | 12 | 4 | 48 |
| M02/03 | 4 | 4 | 16 |

## REFERENCE

| REFERENCE TITLE | REFERENCE No. |
|---|---|
| | |
| | |
| | |
| | |
| | |

## NOTES

ملاحظات

- تمت الموافقة على الرسومات الإنشائية من قبل المكتب الاستشاري
- يجب أن تكون جميع الأبعاد والمناسيب في الموقع قبل البدء بالتنفيذ

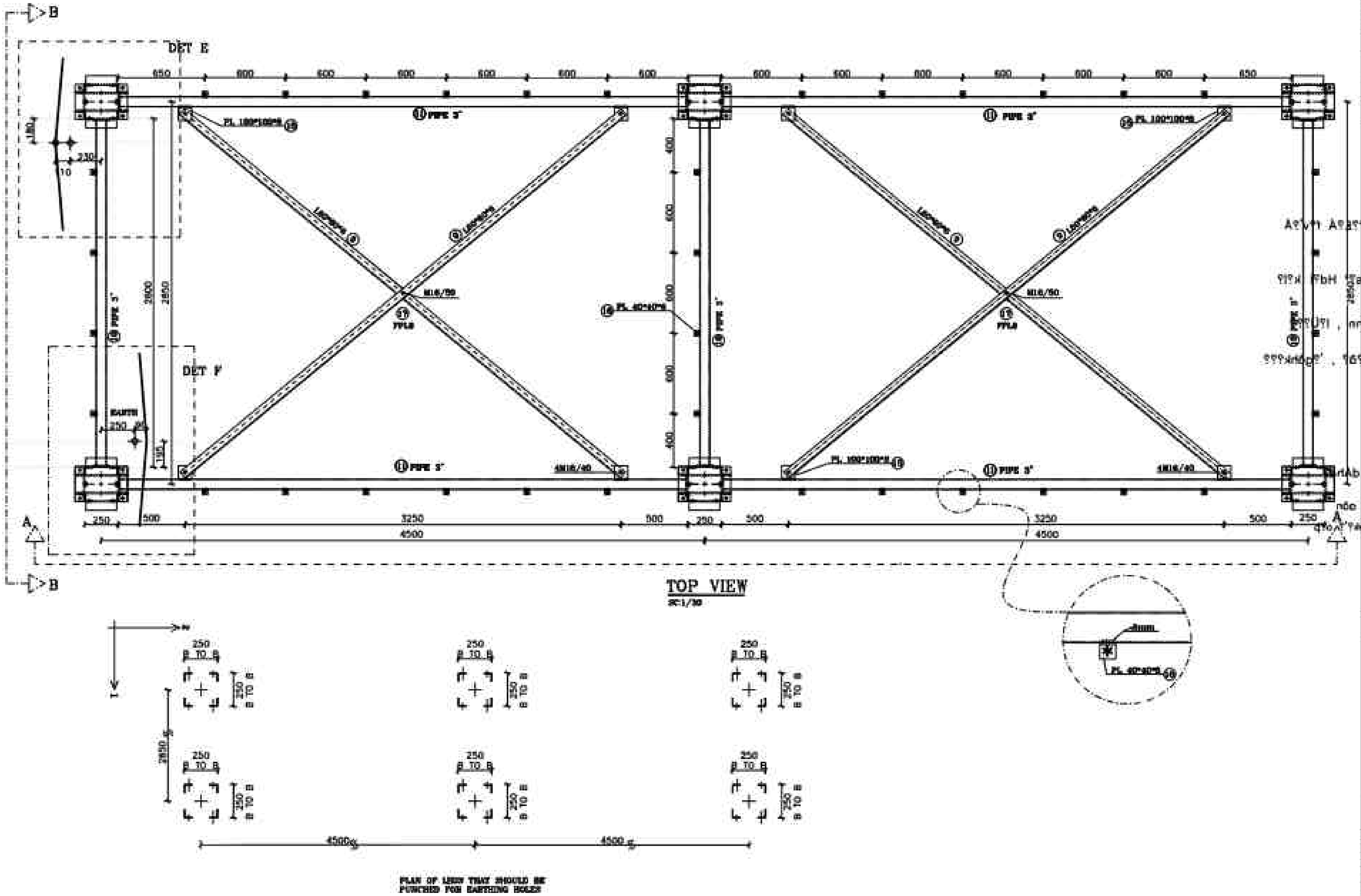


TOP VIEW
SC:1/30







PLAN OF LEGS THAT SHOULD BE PUNCHED FOR EARTHING HOLES

## REFERENCE

| REFERENCE TITLE | REFERENCE No. |
|---|---|
| | |
| | |
| | |
| | |

## NOTES

1- STEEL ST-37
2-ALL BOLTS ARE GRADE: (8.6)
3- ø 12 HOLES (○) ø 22 HOLES (⊕)
ø 13 HOLES (⊖) ø 24 HOLES (⊕)
ø 14 HOLES (⊕) ø 28 HOLES (⊕)
ø 15 HOLES (○) ø 30 HOLES (⊕)
ø 18 HOLES (⊕) ø 35 HOLES (⊕)
MECHANISM AXES (⊕)
4- EARTHING HOLES (✱)
(ALL THE HOLES ARE ø14 EXCEPT AS SHOWN)
5- FOR ALL WELDS "a"=6mm EXCEPT AS SHOWN

| t(mm) | a | b |
|---|---|---|
| t>6mm | 65 | 150 |
| 3<t≤6mm | 70 | 90 |
| 1.5<t≤3mm | 55 | 80 |

## LEGEND

## KEY PLAN

| REV | DATE | DESCRIPTION | DESIGN | DRAWN | CHECKED | APPROVED |
|---|---|---|---|---|---|---|
| 03 | 05/2026 | ACC TO COMMENT | A.SH | A.B | R.KH | M.DA |
| 02 | 04/2026 | ACC TO COMMENT | A.SH | A.B | R.KH | M.DA |
| 01 | 02/2026 | ACC TO COMMENT | A.SH | A.B | R.KH | M.DA |
| 00 | 01/2026 | ISSUE FOR REVIEW | A.SH | A.B | R.KH | M.DA |

Client:

Consultant: موننکو ایران Monenco Iran

Contractor: MOHAM SHARGH CO.

Sub Contractor:

Project: 30MW Solar Power Plant
ISFAHCHESHME 1

Title: EQUIPMENT STRUCTURE DRAWING
DRAWING OF EQUIPMENT STRUCTURE 2DSER

| DOC NO.: | 28P2-B-3MG-DWG-SUS-000000-CV-122 | REV. 03 |
|---|---|---|
| SCALE | SIZE | SHEET 21 OF 31 | FORMAT DWG |

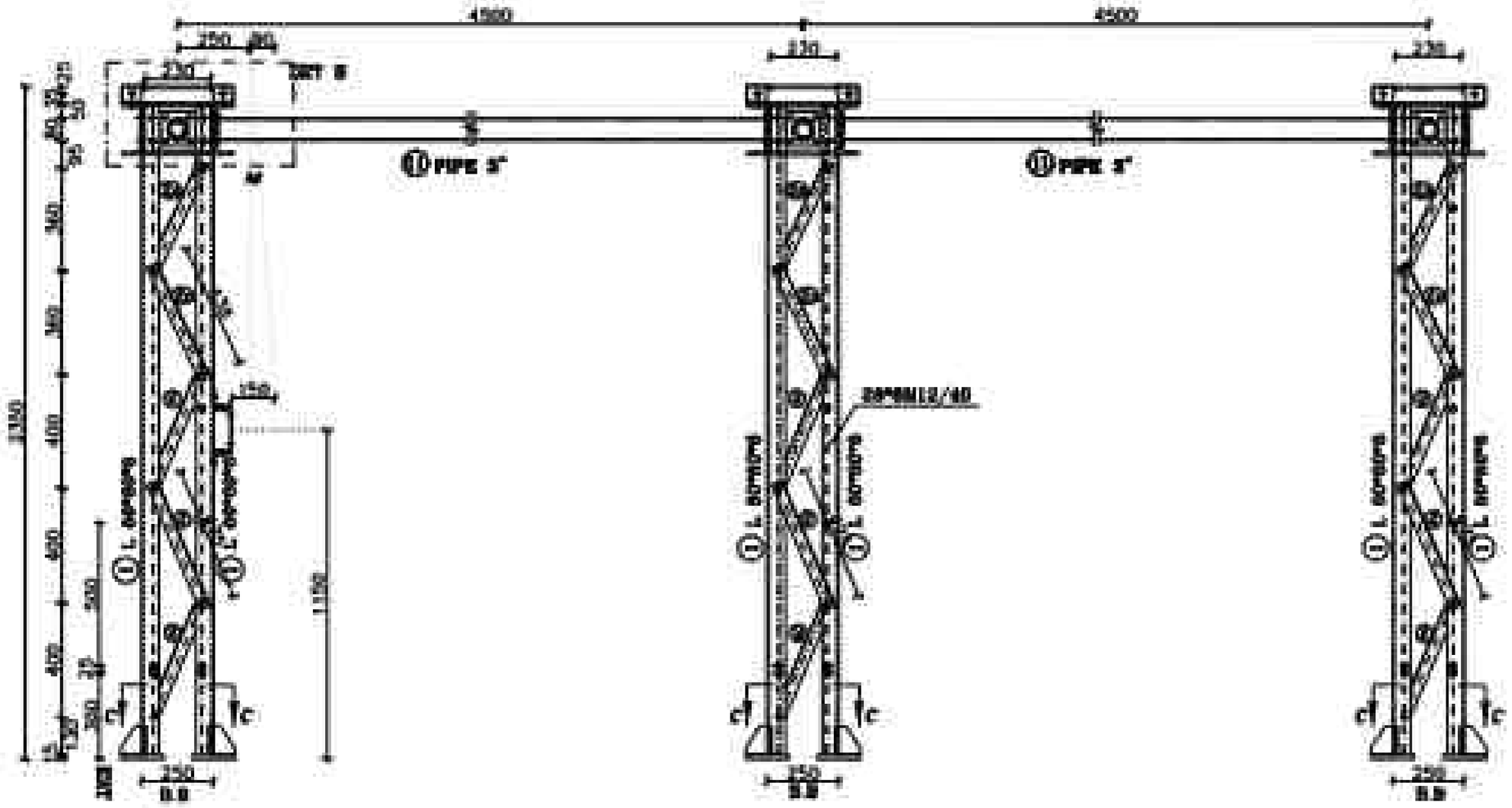


SEC "A-A"
SC:1/25

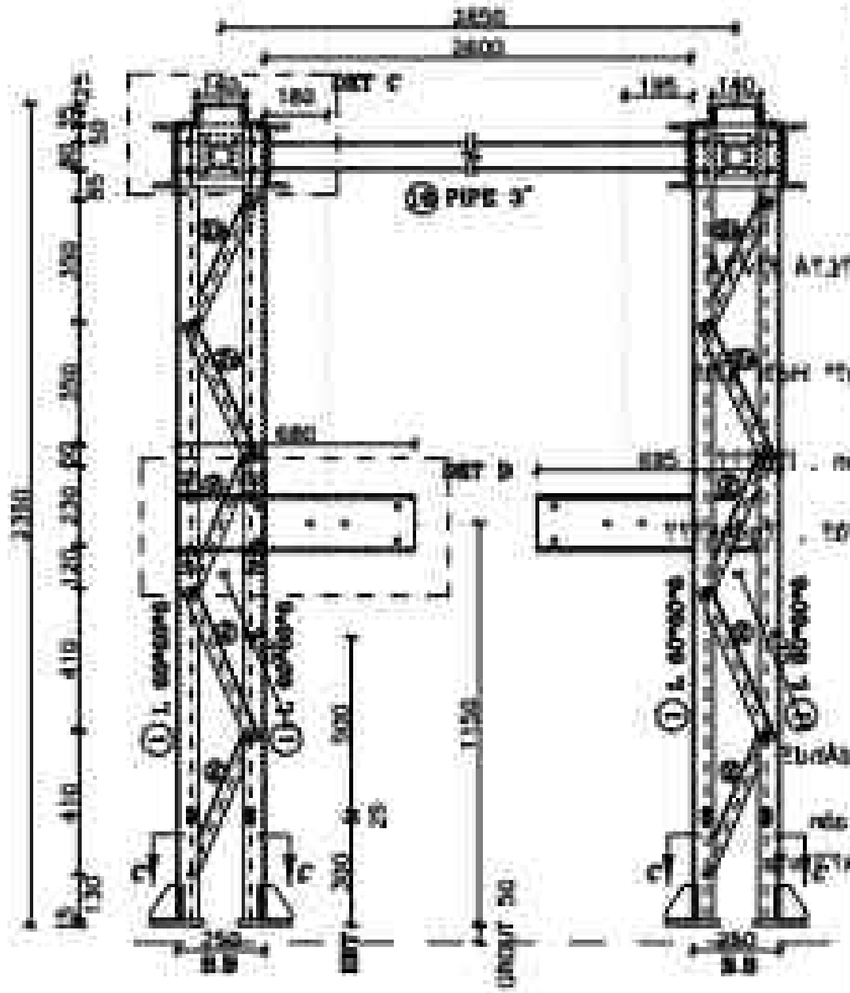


SEC "B-B"
SC:1/25

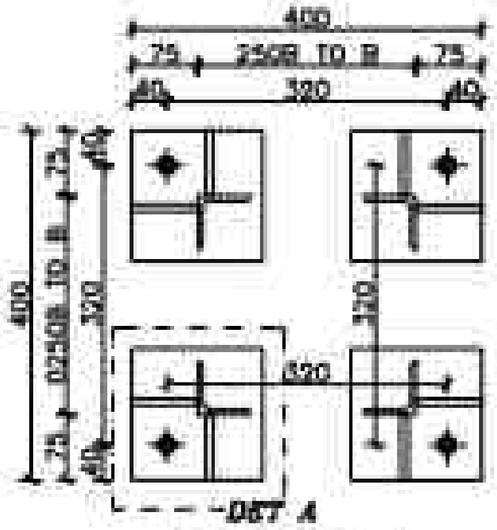


SEC "C-C"
SC:1/10

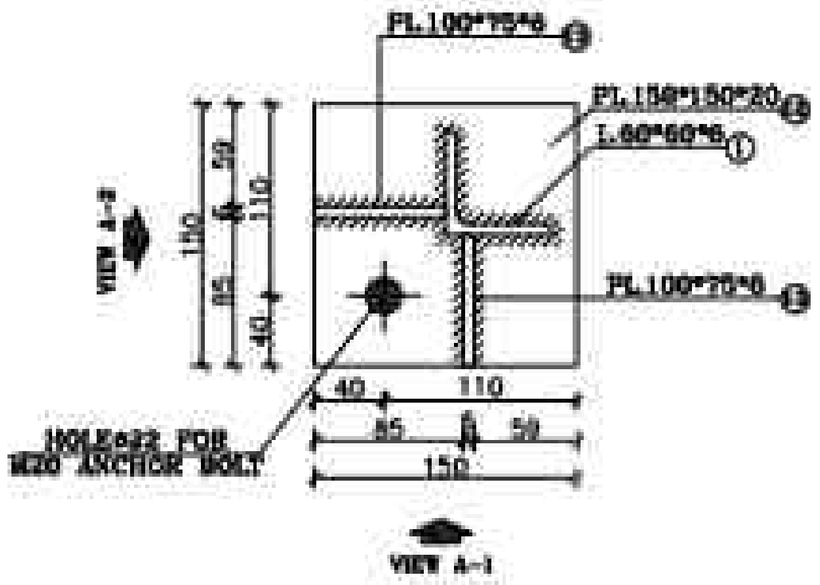


DET "A"
SC:1/5

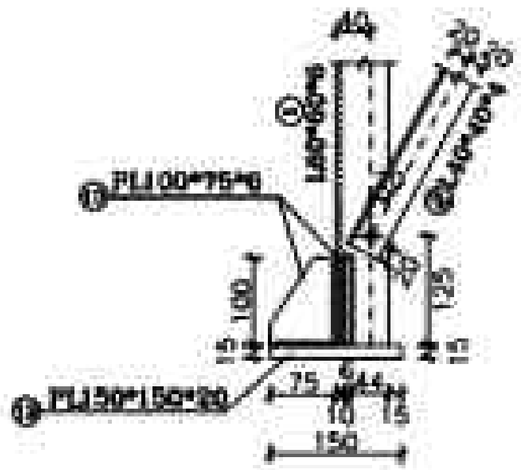


VIEW "A-1"
SC:1/10

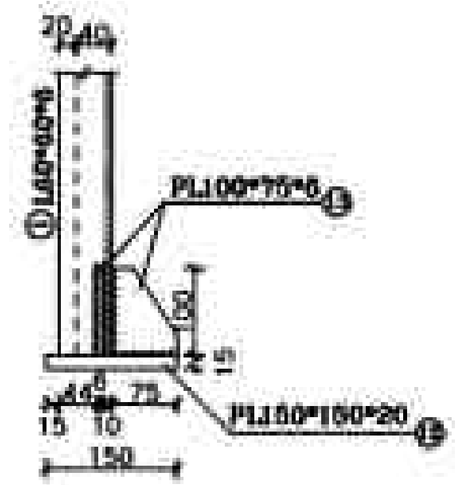


VIEW "A-2"
SC:1/10

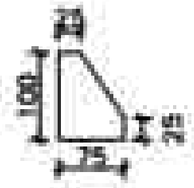


POS 13 : PL100*75*6
SC:1/10

## REFERENCE

| REFERENCE TITLE | REFERENCE No. |
|---|---|
| | |
| | |
| | |
| | |

## NOTES

[illegible]

| [illegible] (mm) | [illegible] | [illegible] |
|---|---|---|
| [illegible] | [illegible] | [illegible] |
| [illegible] | [illegible] | [illegible] |
| [illegible] | [illegible] | [illegible] |

## LEGEND

1- STEEL ST-37
2-ALL BOLTS ARE GRADE 4.6
3- # 12 HOLES (○) # 22 HOLES (⊕)
# 13 HOLES (⊗) # 24 HOLES (⊕)
# 14 HOLES (⊕) # 26 HOLES (⊕)
# 15 HOLES (⊕) # 28 HOLES (⊕)
# 16 HOLES (⊕) # 30 HOLES (⊕)
MECHANISM ASSY (⊕)
← BOTTOM BOLTS (⊕)
(ALL THE HOLES ARE #14 EXCEPT AS SHOWN)
5- FOR ALL WELDS "D"=6mm EXCEPT AS SHOWN.

## KEY PLAN

| REV | DATE | DESCRIPTION | DRAWN | CHECKED | APPROVED |
|---|---|---|---|---|---|
| 03 | 05/2020 | ACC TO COMMENT | A.SH | A.B | R.KH | M.DA |
| 02 | 04/2020 | ACC TO COMMENT | A.SH | A.B | R.KH | M.DA |
| 01 | 03/2020 | ACC TO COMMENT | A.SH | A.B | R.KH | M.DA |
| 00 | 01/2020 | ISSUE FOR REVIEW | A.SH | A.B | R.KH | M.DA |

Client:

Consultant: Mirmahab Engineering

Contractor: MOHAN IRANIAN CO.

Sub Contractor:

Project: [illegible]

Title: EQUIPMENT STRUCTURE DRAWING
DRAWING OF EQUIPMENT
STRUCTURE 2025R

| DOC NO.: | 2SPZ-B-3NG-DFC-SUP-600000-CT-102 | REV 03 |
|---|---|---|
| SCALE | SIZE | SHEET 22 OF 31 | FORMAT |

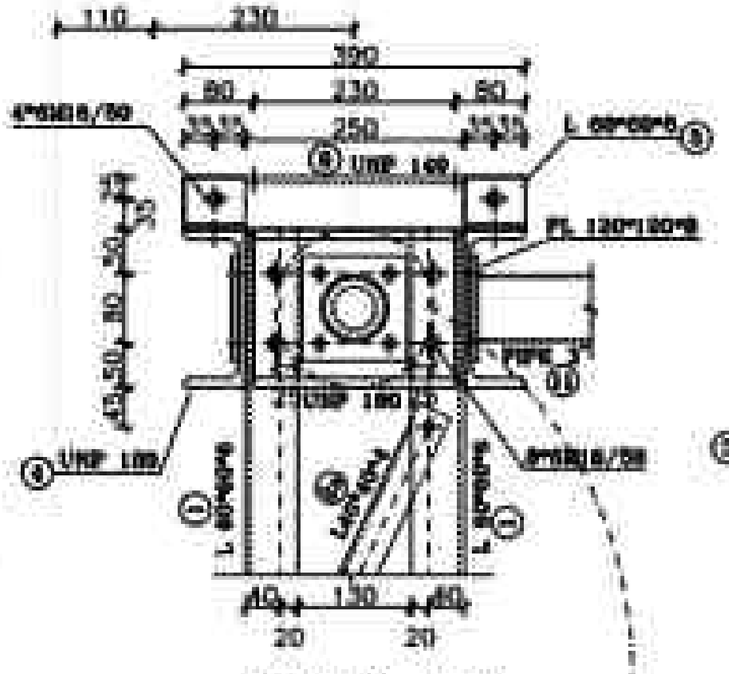


DETAIL "B"
SC:1/10

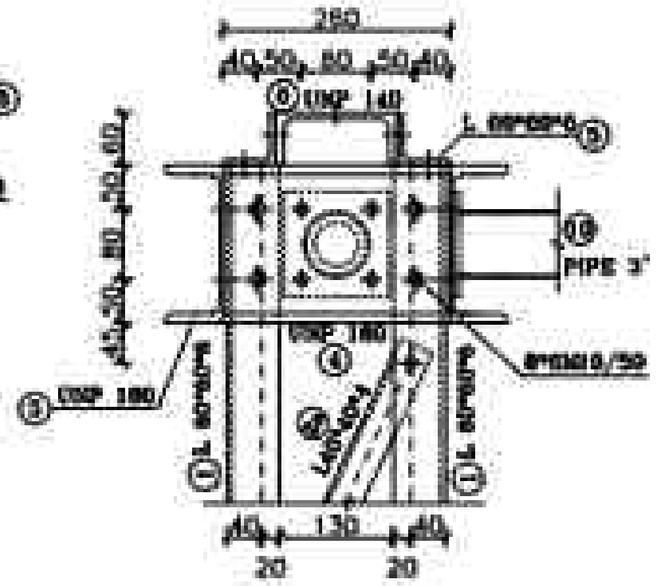


DETAIL "C"
SC:1/10

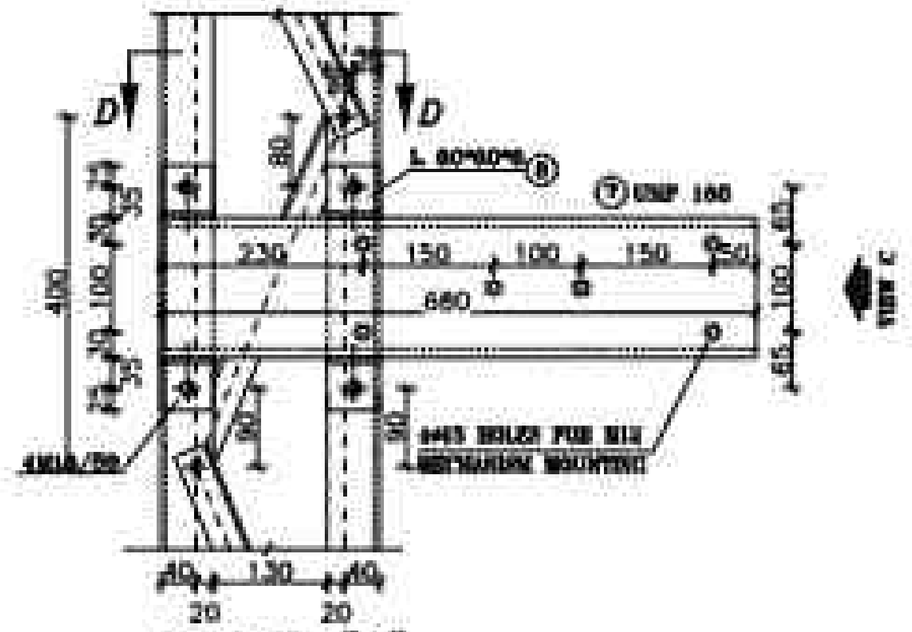


DETAIL "D"
SC:1/10

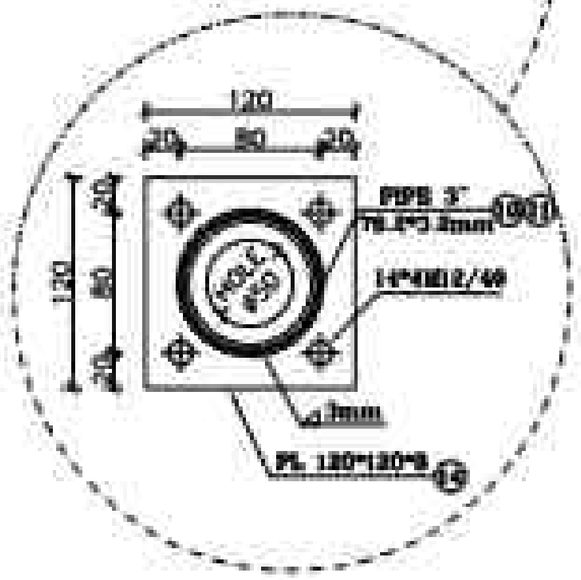


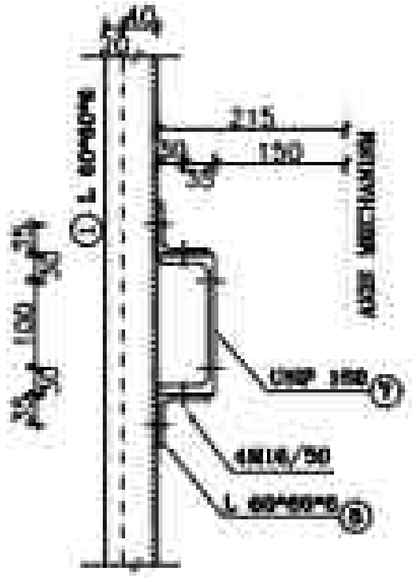


VIEW C
SC:1/10

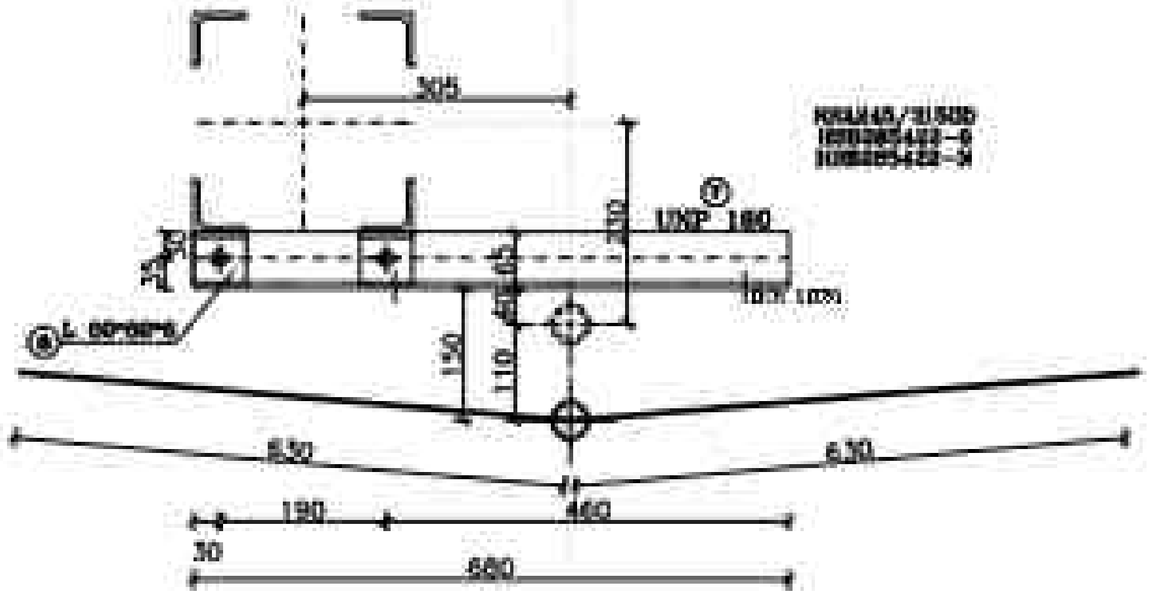


SEC "D-D"
SC:1/10

## REFERENCE

| REFERENCE. TITLE | REFERENCE. No. |
|---|---|
| | |

## NOTES

[illegible]

| [illegible] (mm) | [illegible] | [illegible] |
|---|---|---|
| [illegible] | [illegible] | [illegible] |
| [illegible] | [illegible] | [illegible] |
| [illegible] | [illegible] | [illegible] |

## LEGEND

1- STEEL ST-37
2-ALL BOLTS ARE GRADE (8.8)
3- * 12 HOLES (○) * 22 HOLES (✚)
* 13 HOLES (●) * 24 HOLES (✚)
* 14 HOLES (✚) * 26 HOLES (✚)
* 15 HOLES (●) * 30 HOLES (✚)
* 18 HOLES (✚) * 35 HOLES (✚)
MECHANISM AXIS (✚)
← ANCHORING BOLTS (M)
(ALL THE BOLTS ARE M14 EXCEPT AS SHOWN)
4- FOR ALL WELDS "a"=4mm EXCEPT AS SHOWN.

## KEY PLAN

| REV. | DATE | DESCRIPTION | DESIGN | DRAWN | CHECKED | APPROVED |
|---|---|---|---|---|---|---|
| 03 | [illegible] | ACC TO COMMENT | A.SH | A.B | R.KH | M.DA |
| 02 | [illegible] | ACC TO COMMENT | A.SH | A.B | R.KH | M.DA |
| 01 | [illegible] | ACC TO COMMENT | A.SH | A.B | R.KH | M.DA |
| 00 | [illegible] | ISSUE FOR REVIEW | A.SH | A.B | R.KH | M.DA |

Client:

Consultant: Mazandaran Iron

Contractor: MOHAM SHAMIR CO.

Sub Contractor:

Project: 1000MW Pulp Paper Plant (PULPBOARD-1)

Title: EQUIPMENT STRUCTURE DRAWING
DRAWING OF EQUIPMENT STRUCTURE 20SER

| DOC NO.: | 26P2-S-SMC-SMC-5U3-000000-CF-122 | REV. 00 |
|---|---|---|
| SCALE | SIZE | SHEET 73 OF 31 | FORMAT A1 |

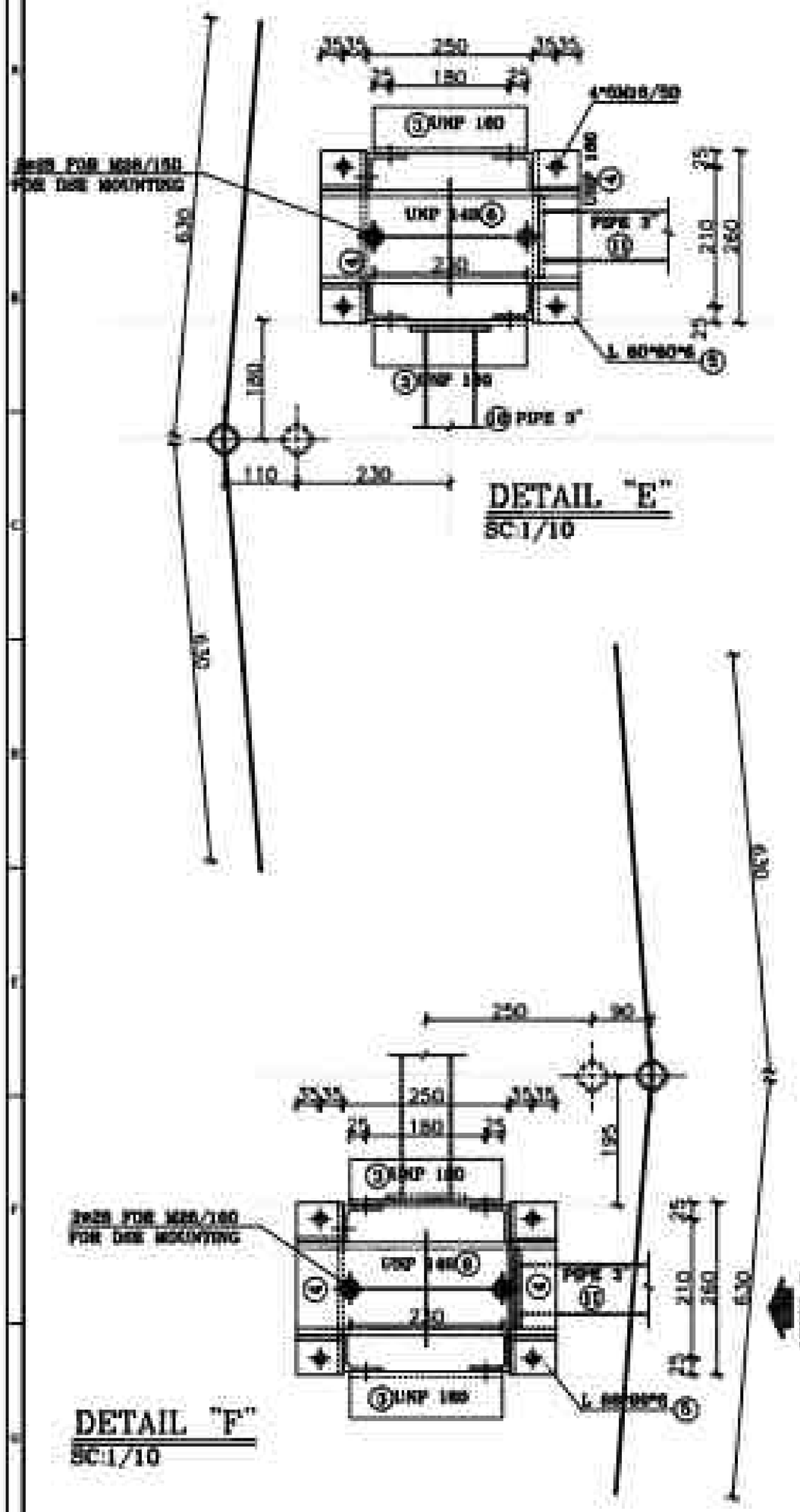


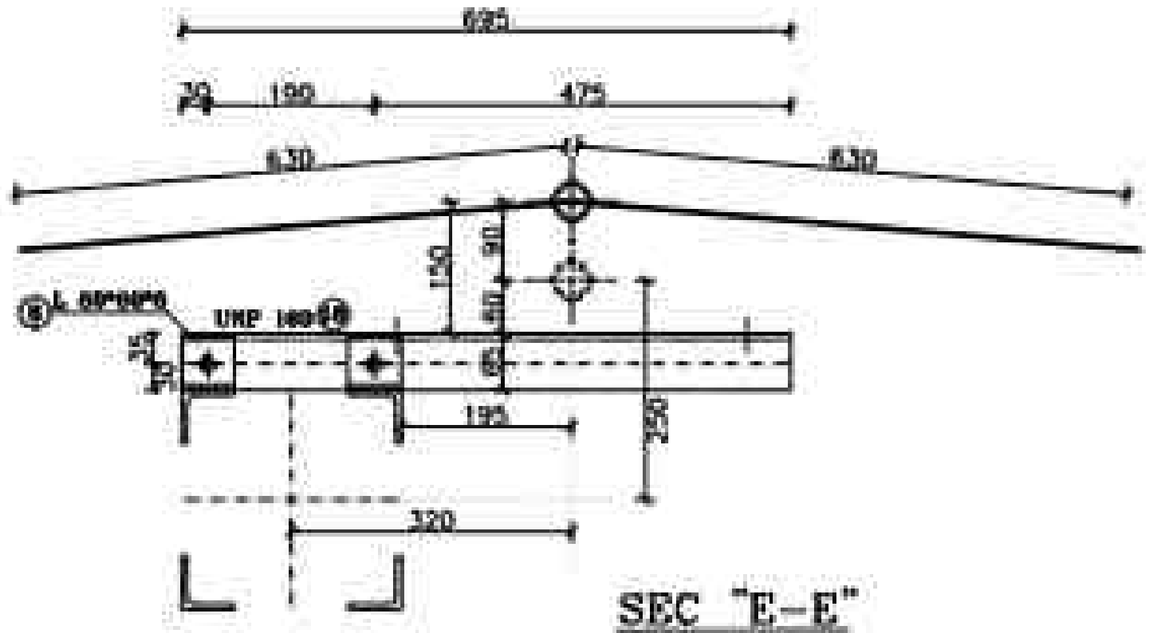


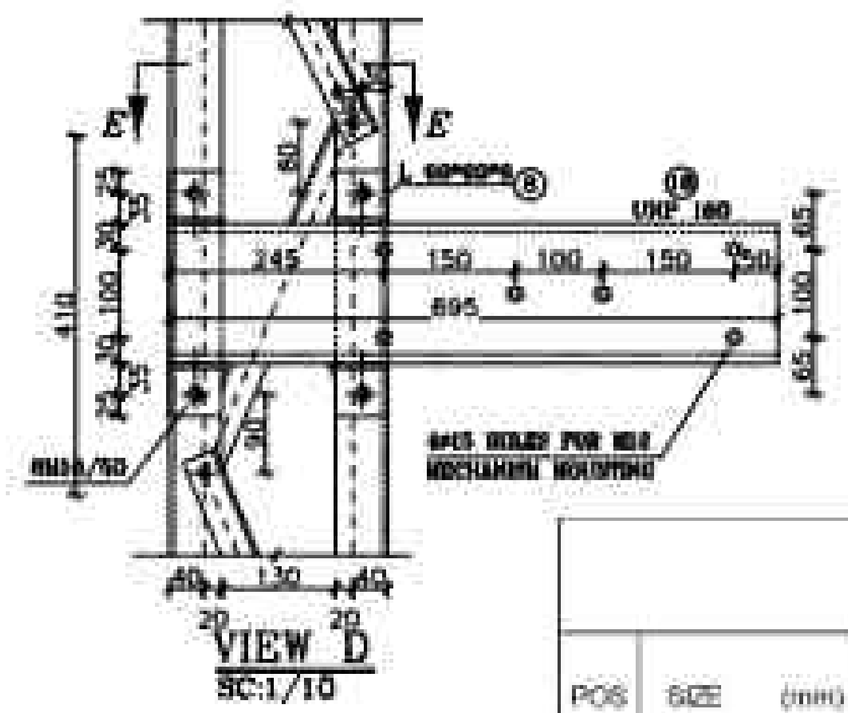


## MATERIAL LIST

| POS | SIZE (mm) | Length (m) | QTY. PCS. | Weight(kg) kg/m | Piece | Total |
|---|---|---|---|---|---|---|
| 1 | L 60*60*6 | 2.275 | 24 | 5.42 | 12.33 | 295.93 |
| 2 | L 40x40x4 | 0.475 | 72 | 2.42 | 1.15 | 82.76 |
| 2a | L 40x40x4 | 0.435 | 45 | 2.42 | 1.06 | 50.85 |
| 3 | UNP 100 | 0.230 | 12 | 22.00 | 5.06 | 60.72 |
| 4 | UNP 180 | 0.260 | 12 | 22.00 | 5.72 | 68.64 |
| 5 | L 60*60*6 | 0.070 | 24 | 5.42 | 0.38 | 9.11 |
| 6 | UNP 140 | 0.390 | 6 | 16.00 | 6.24 | 37.44 |
| 7 | UNP 160 | 0.680 | 1 | 18.80 | 12.78 | 12.78 |
| 8 | L 60*60*6 | 0.080 | 4 | 5.42 | 0.39 | 1.30 |
| 9 | L 60*60*6 | 4.280 | 4 | 5.42 | 23.06 | 92.36 |
| 10 | PIPE 3" | 2.568 | 3 | 5.82 | 14.95 | 44.84 |
| 11 | PIPE 3" | 4.218 | 4 | 5.82 | 24.55 | 98.20 |
| 12 | PL 150*150x15 | — | 24 | — | 2.640 | 63.360 |
| 13 | PL 100x75x6 | — | 48 | — | 0.353 | 16.966 |
| 14 | PL 120*120*8 | — | 14 | — | 0.904 | 12.900 |
| 15 | PL 100*100*8 | — | 8 | — | 0.628 | 5.024 |
| 16 | PL40*40*6 | — | 36 | — | 0.075 | 2.713 |
| 17 | FPL60*60*8 | — | 2 | — | 0.226 | 0.452 |
| 18 | UNP 160 | 0.686 | 1 | 18.80 | 13.07 | 13.07 |
| ST-37-2(DIN 17100) | | Total Weight For Structure | | | 969.18 | |
| SET SITE | | | 2 | | | |
| HOT DIP GALVANIZED | | Total Weight For project | | | 1,938.37 | |

| BOLT DATA & FRACTURE | | | |
|---|---|---|---|
| SIZE | QUANTITY | SET | TOTAL |
| M12/10 | 144 | 2 | 288 |
| M16/10 | 8 | 2 | 16 |
| M16/10 | 160 | 2 | 320 |
| BOLT DATA FOR EQUIPMENT | | | |
| M36/10 | 12 | 2 | 24 |
| M12/10 | 8 | 2 | 16 |

## REFERENCE

| REFERENCE TITLE | REFERENCE No. |
|---|---|
| | |
| | |
| | |
| | |

## NOTES

[illegible]

| [illegible] (mm) | [illegible] | [illegible] |
|---|---|---|
| [illegible] | [illegible] | [illegible] |
| [illegible] | [illegible] | [illegible] |
| [illegible] | [illegible] | [illegible] |

## LEGEND

1- STEEL ST-37
2-ALL BOLTS ARE GRADE (8.8)
3- * 12 HOLES ( ) * 22 HOLES ( )
* 13 HOLES ( ) * 24 HOLES ( )
* 14 HOLES ( ) * 28 HOLES ( )
* 15 HOLES ( ) * 30 HOLES ( )
* 18 HOLES ( ) * 35 HOLES ( )
MECHANISM AXIS ( )
4- BOTTOMS ENGLE ( )
(ALL THE HOLES ARE #14 EXCEPT AS SHOWN)
5- FOR ALL WELDS "S"=6mm EXCEPT AS SHOWN.

## KEY PLAN

| REV. | DATE | DESCRIPTION | DRAWN | CHECKED | REVIEWED | APPROVED |
|---|---|---|---|---|---|---|
| 03 | [illegible] | ACC. TO COMMENT | A.SH | A.B | R.KH | M.DA |
| 02 | [illegible] | ACC. TO COMMENT | A.SH | A.B | R.KH | M.DA |
| 01 | [illegible] | ACC. TO COMMENT | A.SH | A.B | R.KH | M.DA |
| 00 | 01/2020 | ISSUE FOR REVIEW | A.SH | A.B | R.KH | M.DA |

Client:

Consultant: Mineral Trap

Contractor: MOBAR PAKSH CO.

Sub Contractor:

Project: LOUZY Value Added Plant

Title: EQUIPMENT STRUCTURE DRAWING
DRAWING OF EQUIPMENT STRUCTURE 2DS5R

| DOC NO.: | REV |
|---|---|
| JRPI-B-3MC-DFC-203-000009-CY-122 | 03 |

| SCALE | SIZE | SHEET | FORMAT |
|---|---|---|---|
| | | 24 OF 31 | [illegible] |

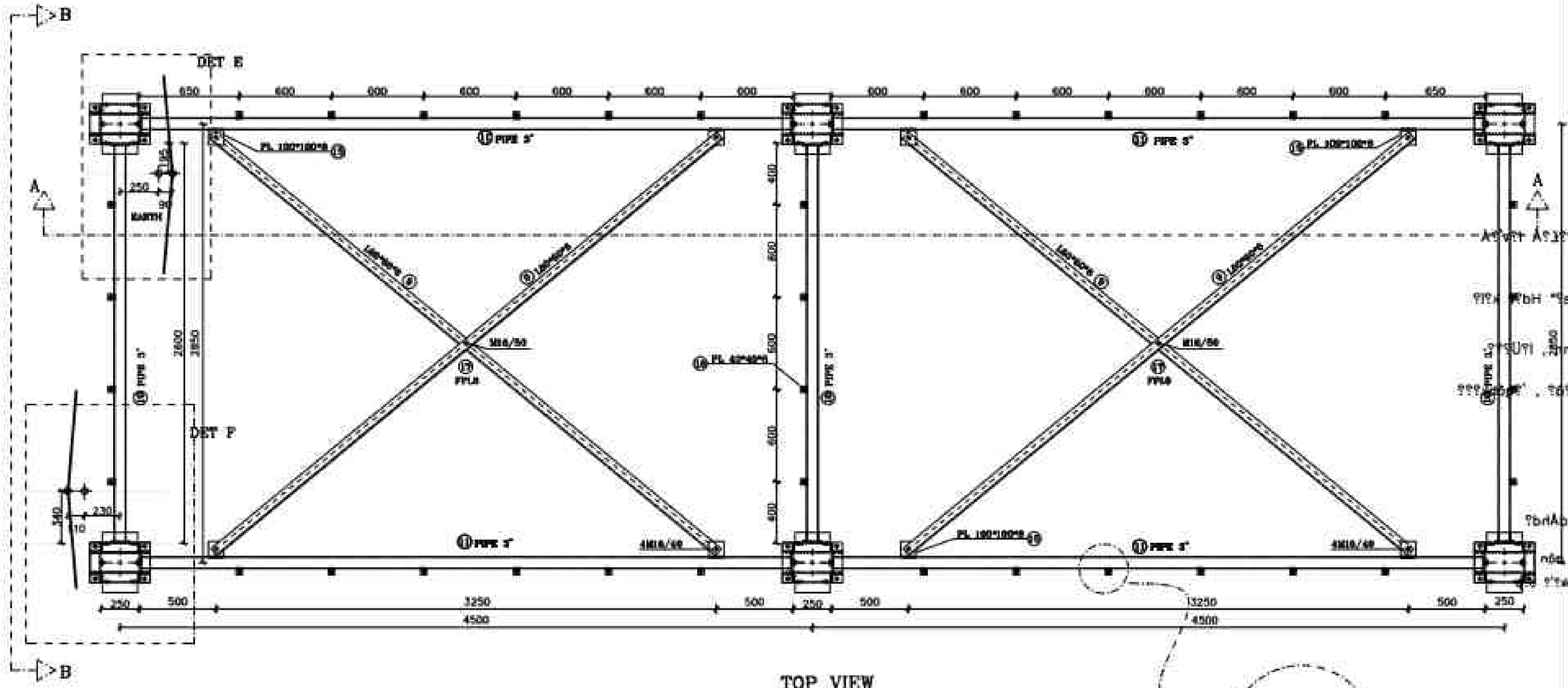


## TOP VIEW

SC:1/30

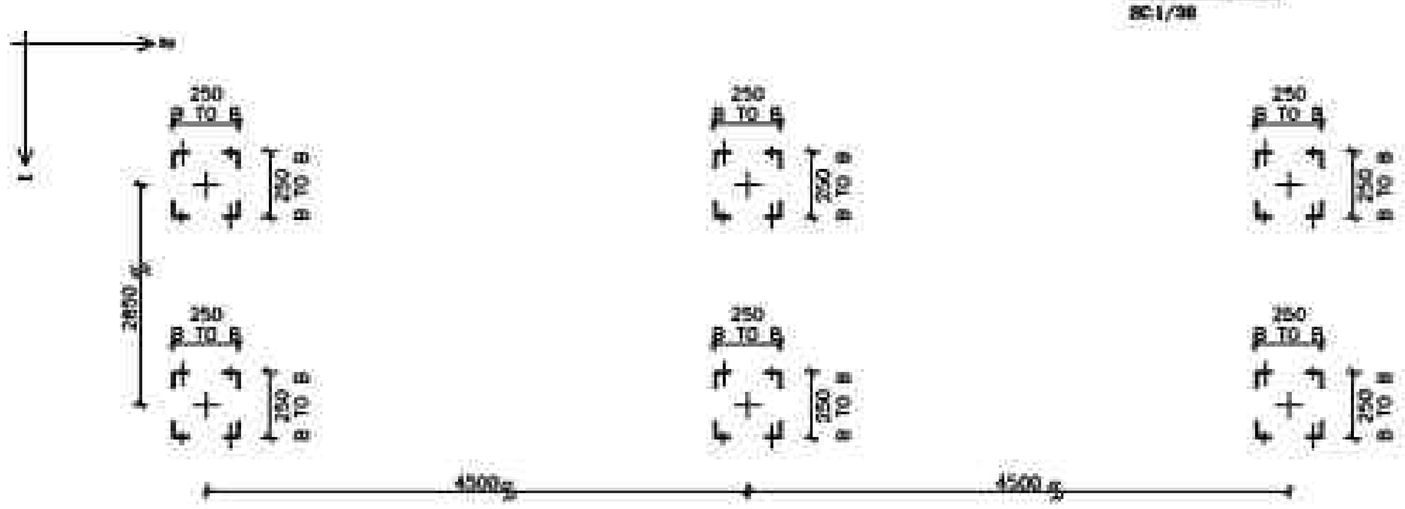


PLAN OF LEGS THAT SHOULD BE PUNCHED FOR EARTHING HOLES

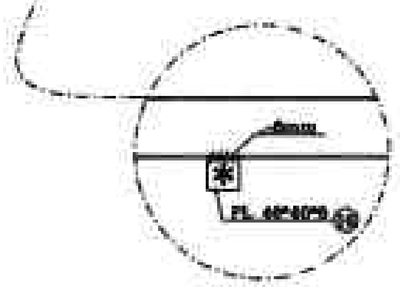


## REFERENCE

| REFERENCE. TITLE | REFERENCE. No. |
|---|---|
| | |
| | |
| | |
| | |

## NOTES

1- STEEL: ST-37

2-ALL BOLTS ARE GRADE: (8.8)

3- ● 12 HOLES (○) ● 22 HOLES (⊕)
● 13 HOLES (⊖) ● 24 HOLES (⊕)
● 14 HOLES (⊕) ● 28 HOLES (⊕)
● 15 HOLES (⊖) ● 30 HOLES (⊕)
● 18 HOLES (⊕) ● 35 HOLES (⊕)

MECHANISM AXES (⊕)

4- EARTHING HOLES (✱)

(ALL THE HOLES ARE #14 EXCEPT AS SHOWN)

5- FOR ALL WELDS "D"=6mm EXCEPT AS SHOWN. D

## LEGEND

| (t) (mm) | ؟؟؟؟ ؟؟؟؟ ؟؟؟؟ ؟؟؟؟ | ؟؟؟؟ ؟؟؟؟ ؟؟؟؟ ؟؟؟؟ |
|---|---|---|
| t>6mm | 85 | 150 |
| 3<t≤6mm | 70 | 90 |
| 1.5<t≤3mm | 55 | 80 |

## KEY PLAN

| REV | DATE | DESCRIPTION | DESIGN | DRAWN | CHECKED | APPROVED |
|---|---|---|---|---|---|---|
| 03 | 05/2026 | ACC TO COMMENT | A.SH | A.B | R.KH | M.DA |
| 02 | 04/2026 | ACC TO COMMENT | A.SH | A.B | R.KH | M.DA |
| 01 | 02/2026 | ACC TO COMMENT | A.SH | A.B | R.KH | M.DA |
| 00 | 01/2026 | ISSUE FOR REVIEW | A.SH | A.B | R.KH | M.DA |

Client:

Consultant: Monenco Iran

Contractor: MOHAM SHARGH CO.

Sub Contractor:

Project: 100MW Solar Power Plant (SARCHESHME)

Title: EQUIPMENT STRUCTURE DRAWING
DRAWING OF EQUIPMENT STRUCTURE 2DSEL

| DOC NO.: | 28P2-B-3MG-DWG-SUS-000000-CV-122 | REV. 03 |
|---|---|---|

| SCALE | SIZE | SHEET | FORMAT |
|---|---|---|---|
| | | 25 OF 31 | A0 |

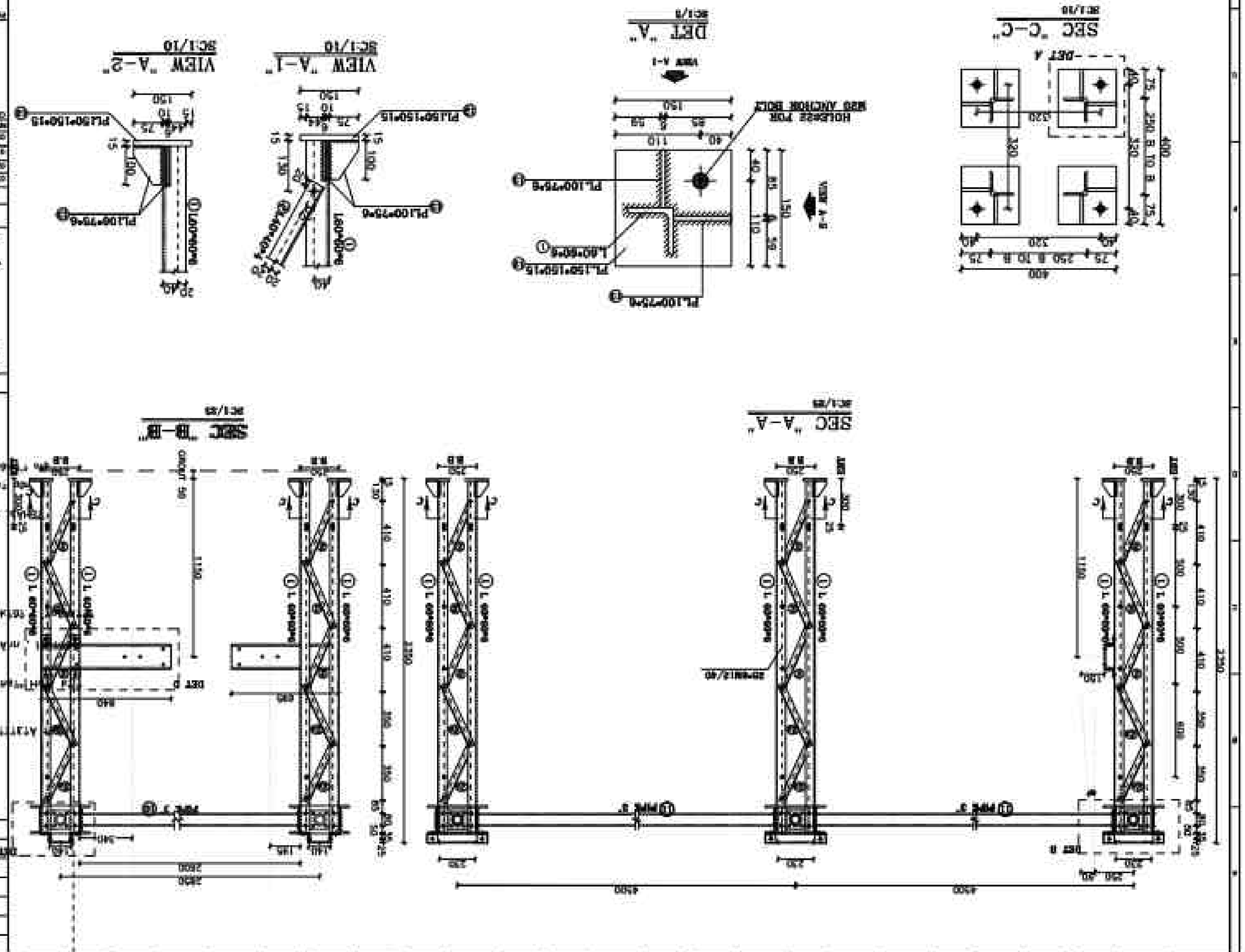
SEC "A-A"
SEC "B-B"
VIEW "A-1"
VIEW "A-2"
DET "A"
SEC "C-C"
HOLDERS FOR
M20 ANCHOR BOLT
PL100*75*6
PL150*150*15
L60*60*6
PL100*75*6
PL150*150*15
PL100*75*6
PL150*150*15
L60*60*6
PL100*75*6
PL150*150*15
L60*60*6
PL100*75*6
PL150*150*15
L60*60*6

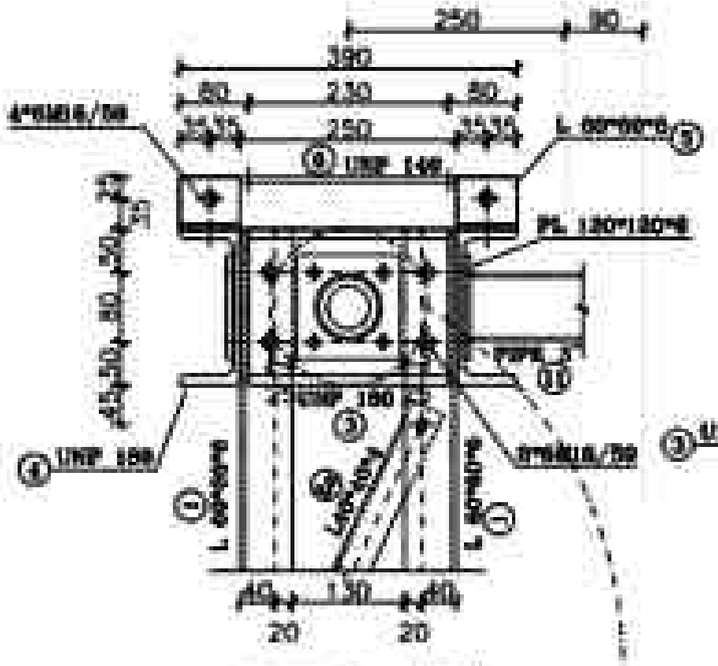


DETAIL "B"
SC:1/10

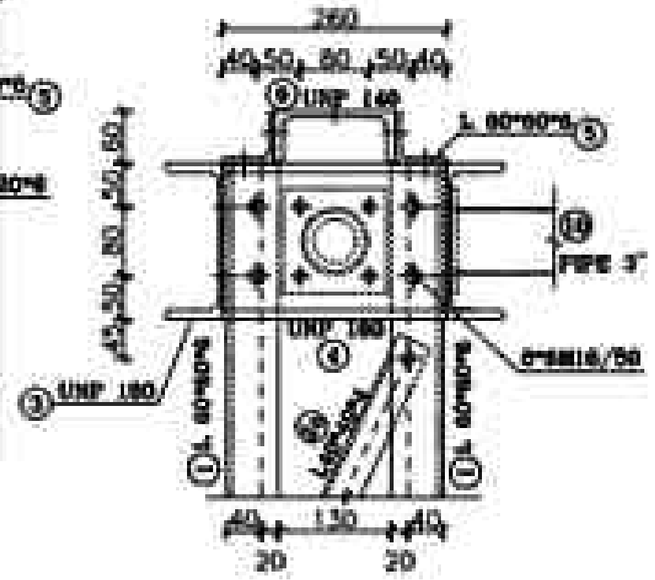


DETAIL "C"
SC:1/10

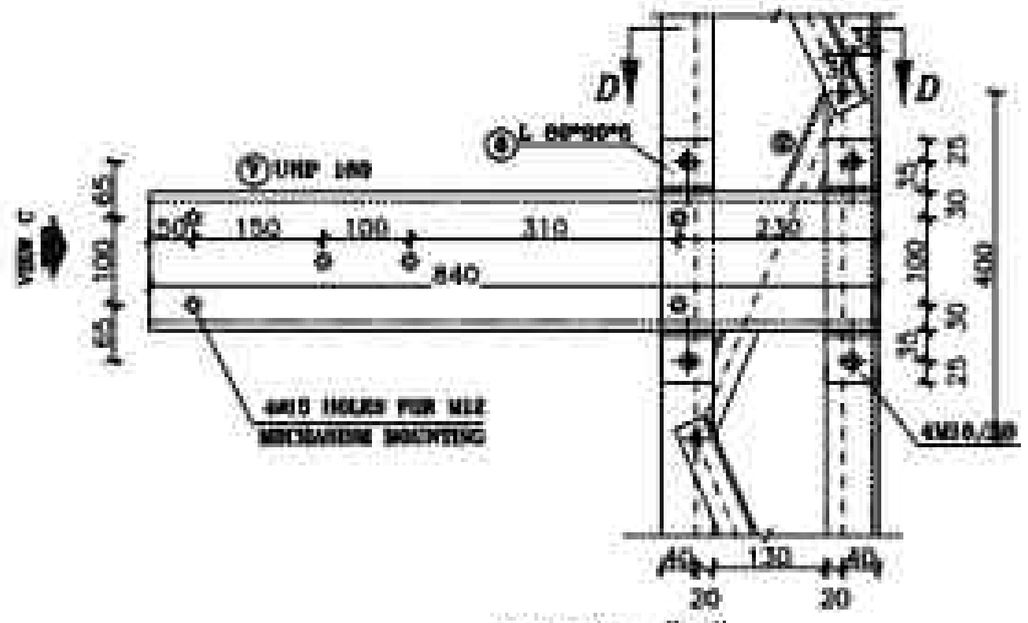


DETAIL "D"
SC:1/10

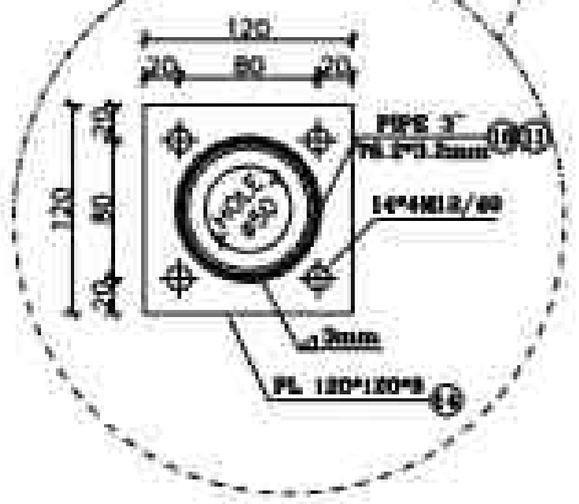


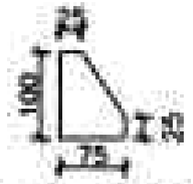


POS 13 : PL100*75*6
SC:1/10

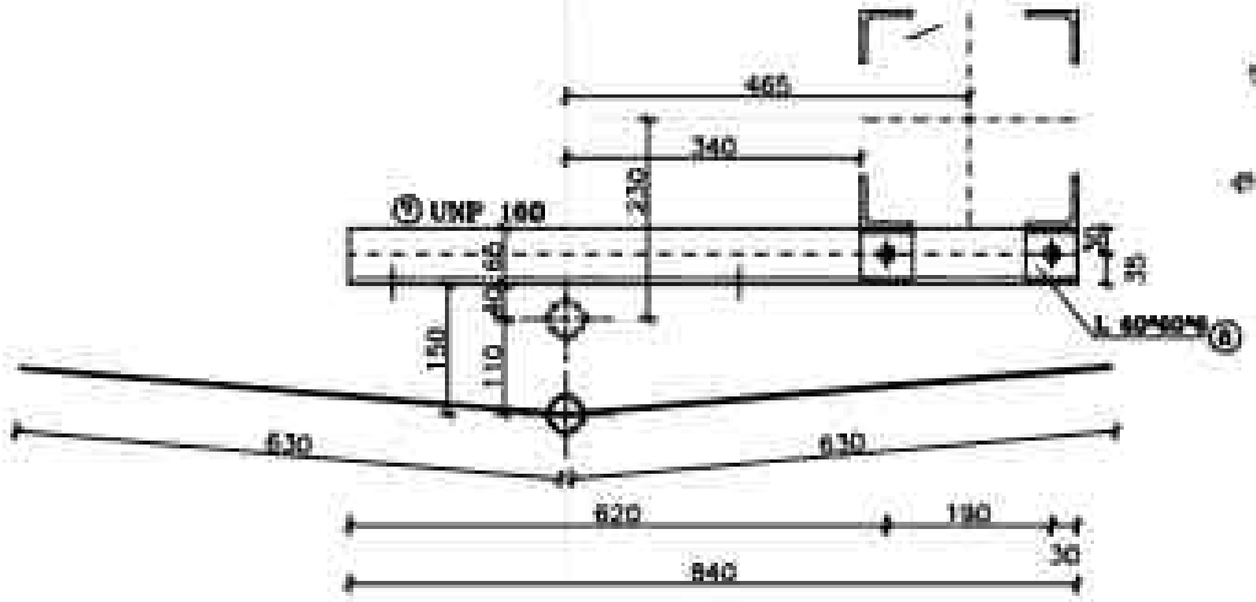


SEC "D-D"
SC:1/10

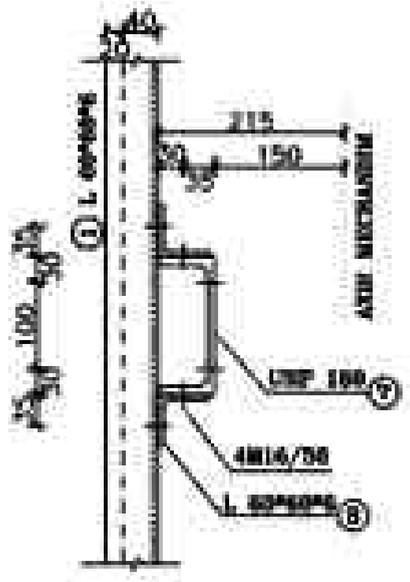


VIEW C
SC:1/10

## REFERENCE

| REFERENCE. TITLE | REFERENCE. No. |
|---|---|
| | |
| | |
| | |
| | |

## NOTES

[illegible]

| [illegible] | [illegible] | [illegible] |
|---|---|---|
| [illegible] | [illegible] | [illegible] |
| [illegible] | [illegible] | [illegible] |
| [illegible] | [illegible] | [illegible] |

## LEGEND

1- STEEL: ST-37
2-ALL BOLTS ARE GRADE: (8.8)
3- • 12 HOLES (○) • 22 HOLES (⊕)
• 13 HOLES (○) • 24 HOLES (⊕)
• 14 HOLES (⊕) • 28 HOLES (⊕)
• 15 HOLES (○) • 30 HOLES (⊕)
• 18 HOLES (⊕) • 35 HOLES (⊕)
MECHANICAL ANCHOR (⊕)
4- MAINTENANCE HOLES (⊕)
(ALL THE HOLES ARE ø14 EXCEPT AS SHOWN)
5- FOR ALL WELDS "S"=6mm EXCEPT AS SHOWN "S"

## KEY PLAN

| REV | DATE | DESCRIPTION | DESIGN | DRAWN | CHECKED | APPROVED |
|---|---|---|---|---|---|---|
| 03 | 03/2024 | ACC TO COMMENT | A.SH | A.B | R.KH | M.DA |
| 02 | 04/2024 | ACC TO COMMENT | A.SH | A.B | R.KH | M.DA |
| 01 | 02/2024 | ACC TO COMMENT | A.SH | A.B | R.KH | M.DA |
| 00 | 01/2024 | ISSUE FOR REVIEW | A.SH | A.B | R.KH | M.DA |

Client:

Consultant: Moasseso Inc

Contractor: MOHAM ENGINEERING CO.

Project: [illegible]

Title: EQUIPMENT STRUCTURE DRAWING
DRAWING OF EQUIPMENT STRUCTURE 20SEL

| DOC NO.: | [illegible] | REV |
|---|---|---|
| | | 00 |

| SCALE | REF | SHEET | FORMAT |
|---|---|---|---|
| | | 37 OF 31 | [illegible] |

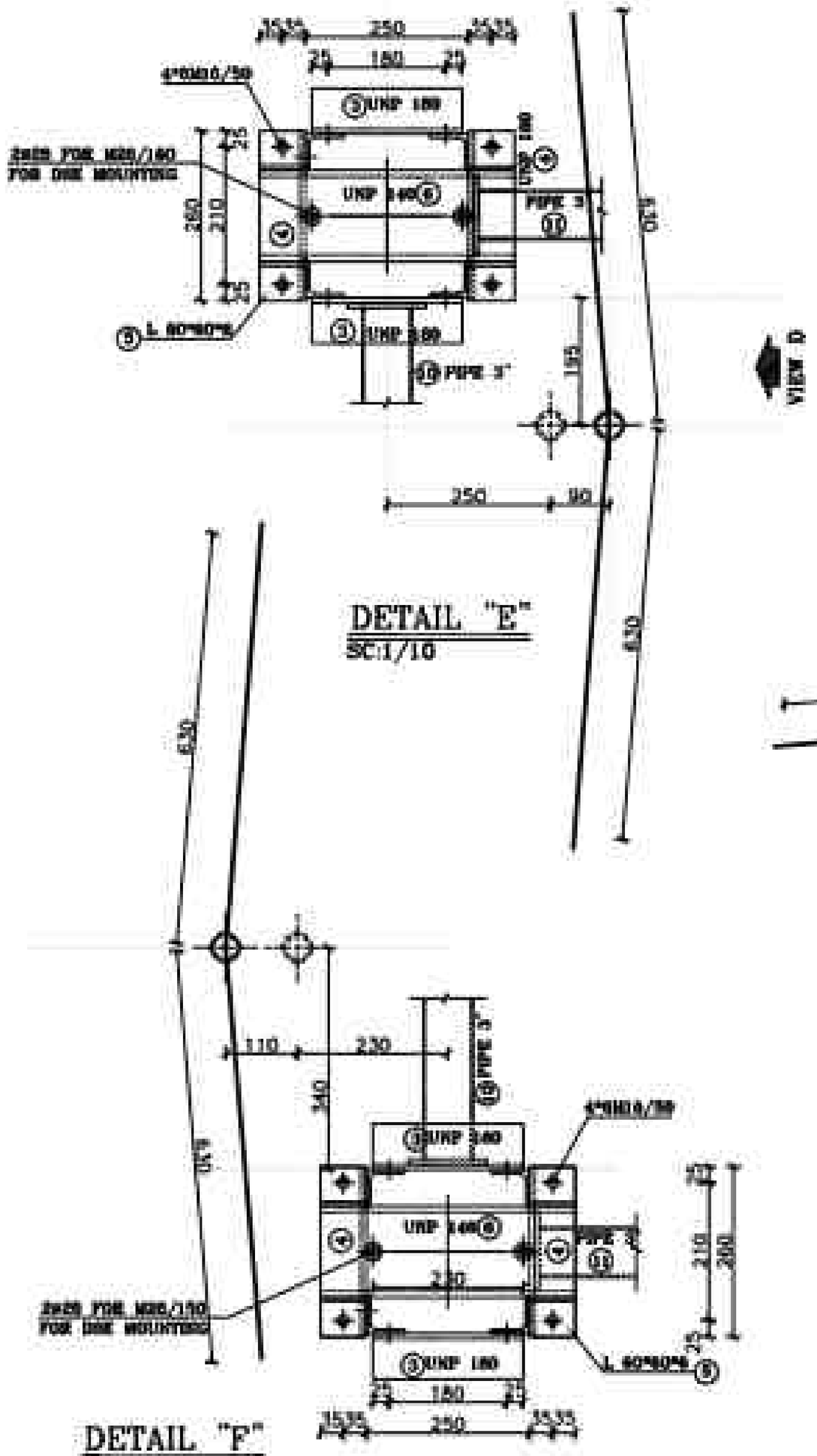


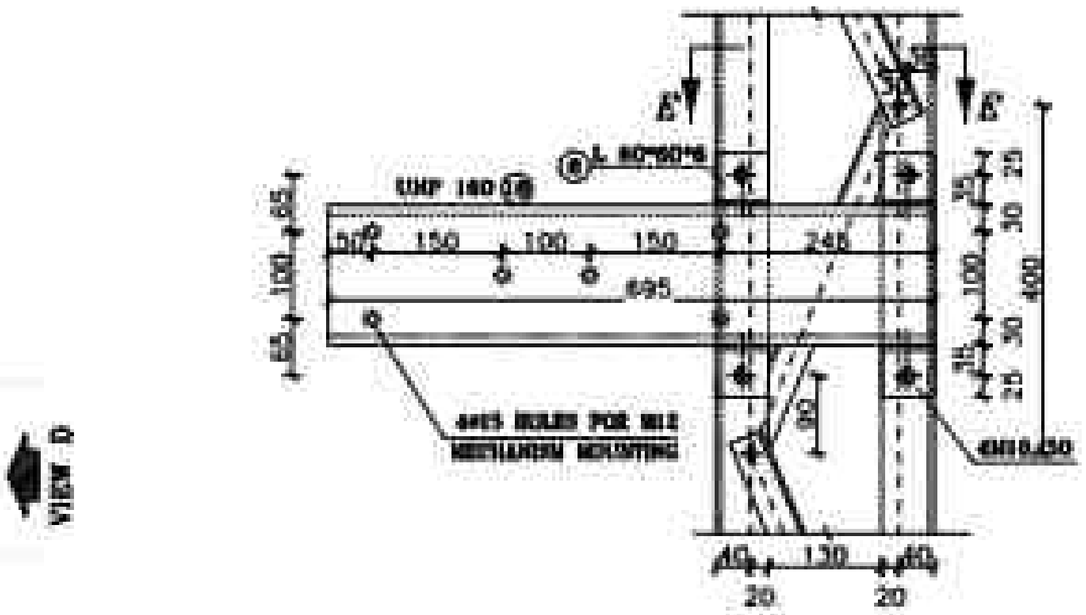


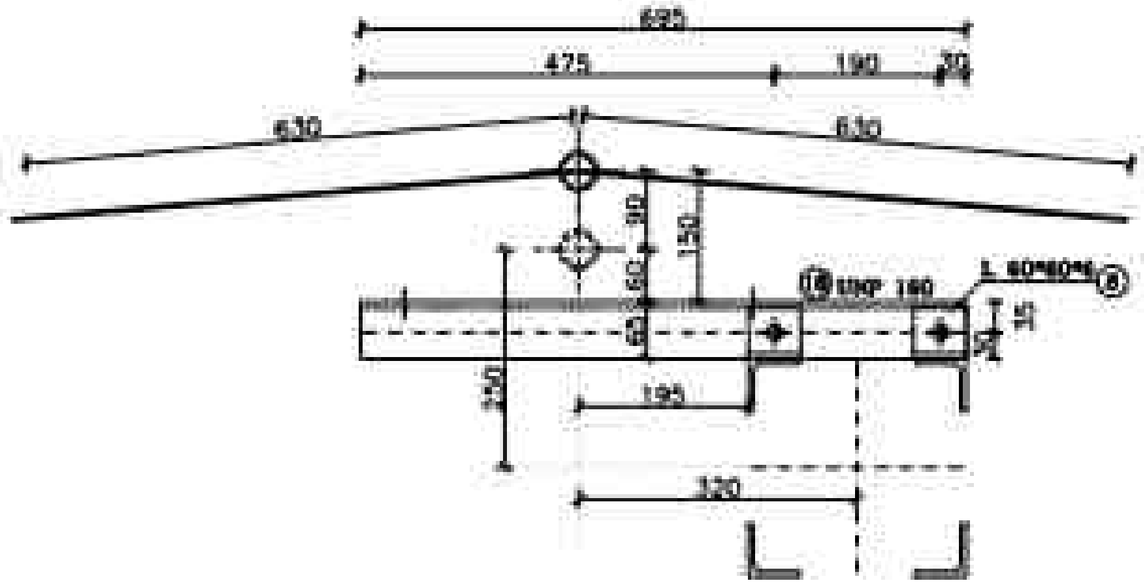


## MATERIAL LIST

| POS. | SIZE (mm) | Length (m) | QTY PCS | Weighing kgm | Piece | Total |
|---|---|---|---|---|---|---|
| 1 | L 50*50*5 | 2.275 | 24 | 3.42 | 18.33 | 264.93 |
| 2 | L 45x45x4 | 0.454 | 72 | 2.42 | 1.17 | 84.53 |
| 2a | L 45x45x4 | 0.429 | 48 | 2.42 | 1.04 | 49.93 |
| 3 | UNP 180 | 0.238 | 12 | 22.00 | 5.24 | 62.72 |
| 4 | UNP 180 | 0.238 | 12 | 22.00 | 5.24 | 62.64 |
| 5 | L 50*50*5 | 0.575 | 24 | 3.42 | 0.98 | 23.11 |
| 6 | UNP 140 | 0.238 | 8 | 16.00 | 3.81 | 27.44 |
| 7 | UNP 180 | 0.940 | 1 | 16.00 | 15.03 | 15.03 |
| 8 | L 50*50*5 | 0.249 | 4 | 3.42 | 0.85 | 3.39 |
| 9 | L 50*50*5 | 4.209 | 4 | 3.42 | 14.39 | 57.56 |
| 10 | PIPE 3" | 2.056 | 3 | 5.42 | 11.15 | 33.45 |
| 11 | PIPE 3" | 4.218 | 4 | 5.42 | 22.86 | 91.44 |
| 12 | PL 150*150*15 | — | 24 | — | 2.945 | 70.680 |
| 13 | PL 100*75*8 | — | 48 | — | 0.353 | 16.944 |
| 14 | PL 120*120*8 | — | 14 | — | 0.904 | 12.656 |
| 15 | PL 100*100*8 | — | 8 | — | 0.628 | 5.024 |
| 16 | PL 40*40*5 | — | 90 | — | 0.075 | 6.750 |
| 17 | PL 40*40*5 | — | 3 | — | 0.075 | 0.225 |
| 18 | UNP 180 | 0.238 | 1 | 18.00 | 4.28 | 4.28 |
| STRUCTURAL STEEL | | Total Weight of the Structure | | | 912.12 | |
| SET SITE | | 2 | | | | |
| HOT DIP GALVANIZED | | Total Weight of the project | | | 1,824.45 | |

| INSTALLATION TOOL | | | |
|---|---|---|---|
| SIZE | QUANTITY | SET | TOTAL |
| M12/40 | 100 | 2 | 200 |
| M16/50 | 8 | 2 | 16 |
| M16/50 | 160 | 2 | 320 |
| SOFTLIFT EQUIPMENT | | | |
| M16/50 | 12 | 2 | 24 |
| M12/50 | 8 | 2 | 16 |

## REFERENCE

| REFERENCE TITLE | REFERENCE No. |
|---|---|
| | |
| | |
| | |
| | |

## NOTES

[illegible]

| [illegible] (mm) | [illegible] | [illegible] |
|---|---|---|
| [illegible] | [illegible] | [illegible] |
| [illegible] | [illegible] | [illegible] |
| [illegible] | [illegible] | [illegible] |

## LEGEND

1- STEEL: ST-37
2-ALL BOLTS ARE GRADE (8.8)
3- * 12 HOLES (○) * 32 HOLES (✚)
* 13 HOLES (○) * 34 HOLES (✚)
* 14 HOLES (✚) * 35 HOLES (✚)
* 15 HOLES (○) * 36 HOLES (✚)
* 18 HOLES (✚) * 38 HOLES (✚)
MECHANISM JOINT (✚)
4- CONTROL HOLES (✚)
(ALL THE HOLES ARE ø14 EXCEPT AS SHOWN)
5- FOR ALL WELDS "S"=6mm EXCEPT AS SHOWN "S"

## KEY PLAN

| REV. | DATE | DESCRIPTION | DRAWN | CHECKED | APPROVED |
|---|---|---|---|---|---|
| 03 | 05/2020 | ACC TO COMMENT | A.SH | A.B | R.KH | M.DA |
| 02 | 04/2020 | ACC TO COMMENT | A.SH | A.B | R.KH | M.DA |
| 01 | 02/2020 | ACC TO COMMENT | A.SH | A.B | R.KH | M.DA |
| 00 | 01/2020 | ISSUE FOR REVIEW | A.SH | A.B | R.KH | M.DA |

Client: Mowasalat

Contractor: MOHAN KHARCH CO.

Sub Contractor:

Project: 1.1MW Solar Power Plant
ONAIZA-GROUP 1

Title: EQUIPMENT STRUCTURE DRAWING
DRAWING OF EQUIPMENT
STRUCTURE 2DISEL

DOC NO.: 2SP2-B-SMD-DFD-DIS-000000-CY-1A2

REV: 00

SCALE | SIZE | SHEET 22 OF 31 | FORMAT A0

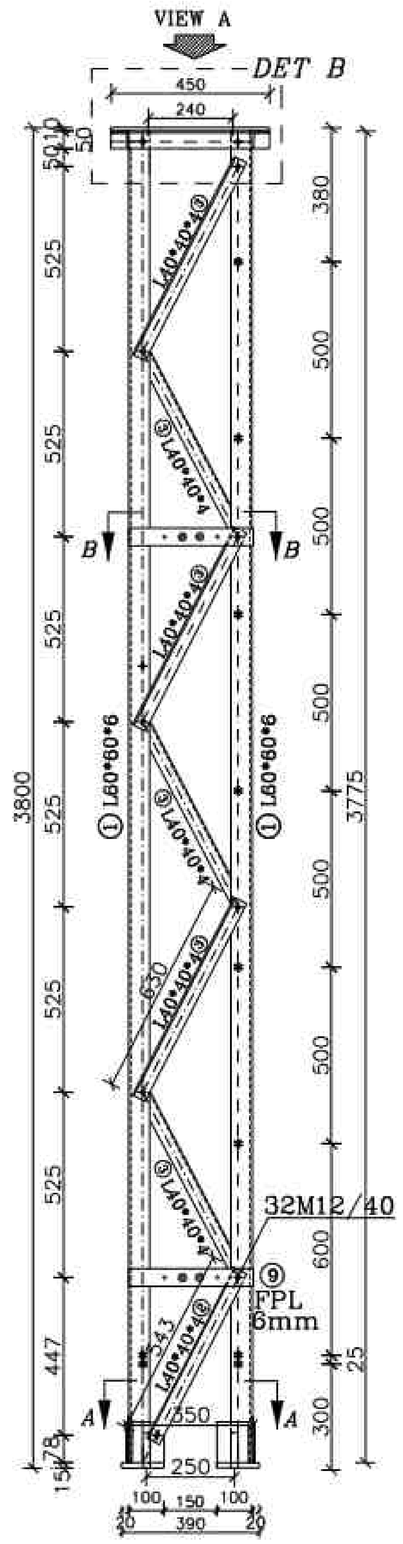


VIEW "B"
SC:1/25

SUPPORT 2SNCT
NO:2

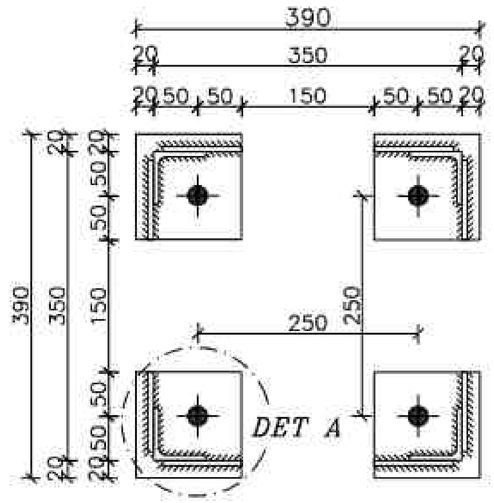


SEC "A-A"
SC:1/10

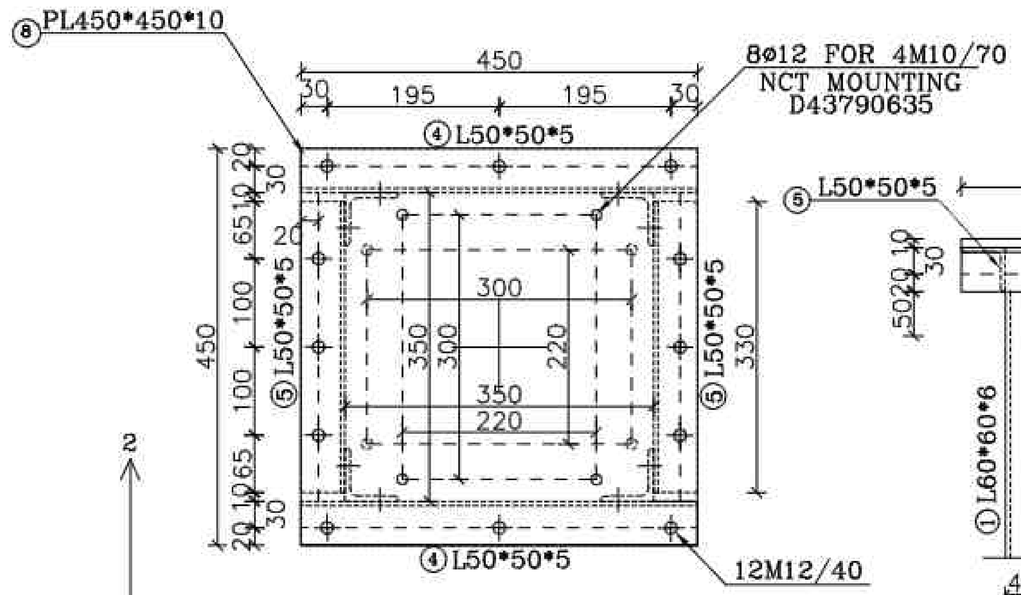


VIEW "A"
SC:1/10

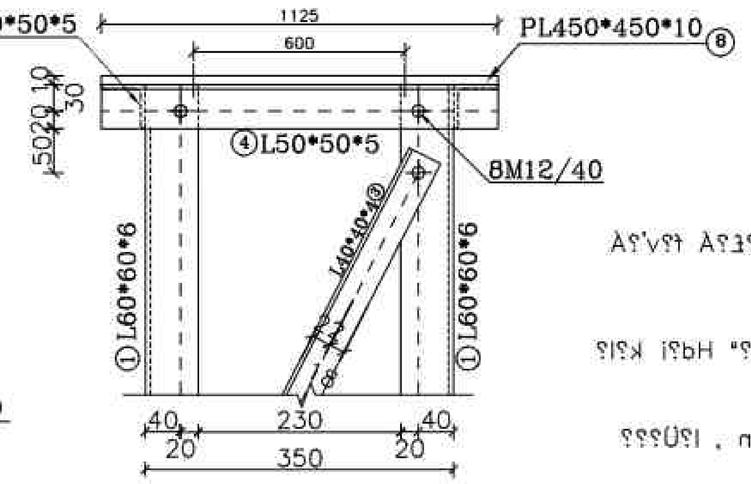


DETAIL "B"
SC:1/10

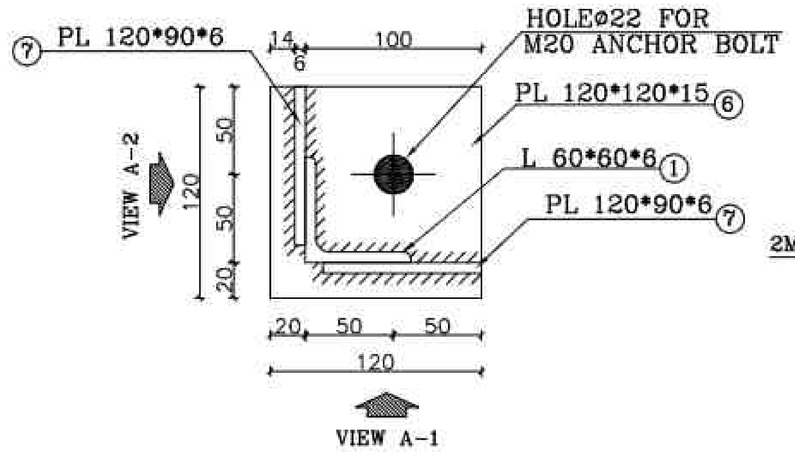


DET "A"
SC:1/5

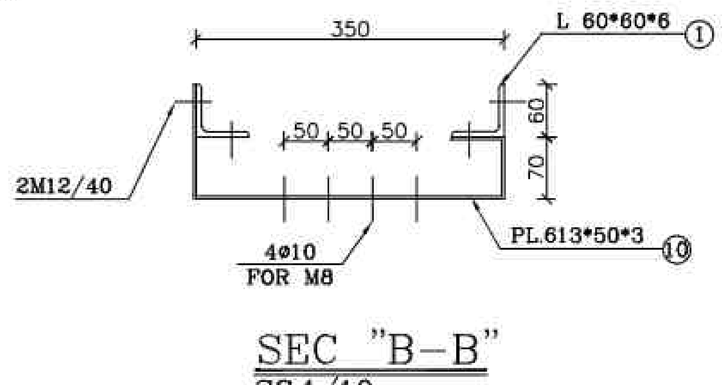


SEC "B-B"
SC:1/10

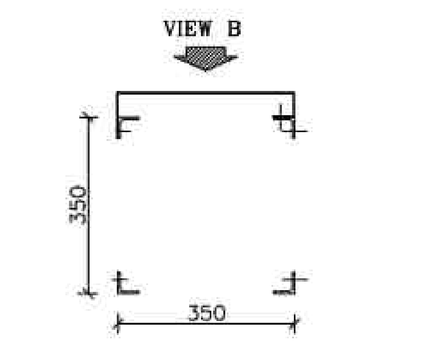


PLAN OF LEGS THAT SHOULD BE PUNCHED FOR EARTHING HOLES

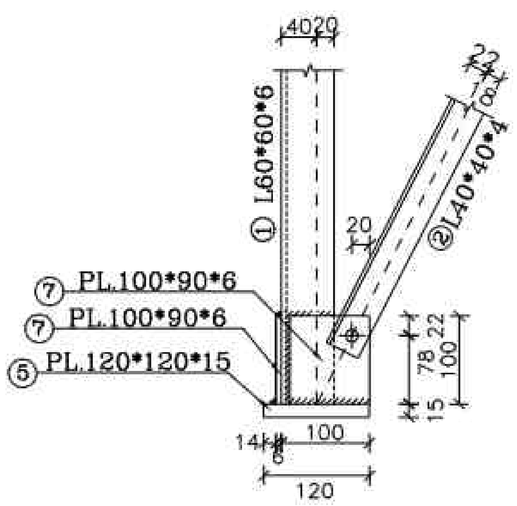


VIEW A-1
SC:1/10

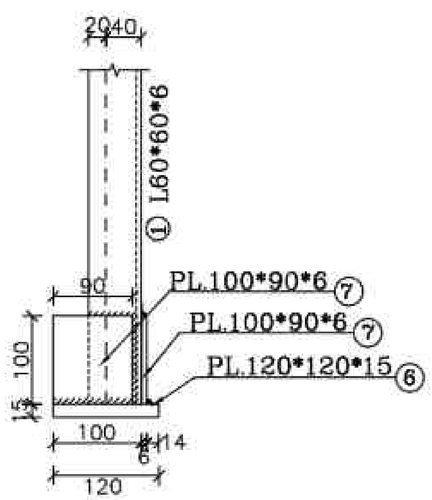


VIEW A-2
SC:1/10

## BOLT LIST

| SIZE | QUANTITY) | SET | TOTAL |
|---|---|---|---|
| M12/40 | 56 | 2 | 112 |

## BOLT LIST EQUIPMNT

| SIZE | QUANTITY) | SET | TOTAL |
|---|---|---|---|
| M10/70 | 4 | 2 | 8 |

## LISTOFFER STRUCTURE

| POS | SIZE (mm) | Length (m) | QTY PCS | Weight(kg) kg/m | Piece | Total |
|---|---|---|---|---|---|---|
| 1 | L 60x60x6 | 3.775 | 4 | 5.42 | 20.46 | 81.84 |
| 2 | L 40x40x4 | 0.543 | 4 | 2.42 | 1.31 | 5.26 |
| 3 | L 40x40x4 | 0.630 | 24 | 2.42 | 1.52 | 36.59 |
| 4 | L 50x50x5 | 0.450 | 4 | 3.77 | 1.70 | 6.79 |
| 5 | L 50x50x5 | 0.330 | 2 | 3.77 | 1.24 | 2.49 |
| 6 | PL: 120x120x15 | ------- | 4 | ------ | 1.696 | 6.782 |
| 7 | PL: 100x90x6 | ------- | 8 | ------ | 0.424 | 3.391 |
| 8 | PL: 450x450x10 | ------- | 1 | ------ | 15.896 | 15.896 |
| 9 | FPL: 50x50x6 | ------- | 4 | ------ | 0.118 | 0.471 |
| 10 | PL: 613x50x3 | ------- | 2 | ------ | 0.722 | 1.444 |
| ST-37-2(DIN 17100) | | Total Weight/For Structure | | | 160.95 | |
| SET SITE | | 2 | | | | |
| HOT DIP GALVANIZED | | Total Weight/For project | | | 321.89 | |

این جدول فهرست مصالح و آهن آلات بوده و جنبه اجرایی ندارد و طولها می بایست مجدداً توسط سازنده کنترل شود

## REFERENCE

| REFERENCE. TITLE | REFERENCE. No. |
|---|---|
| | |
| | |
| | |
| | |

## NOTES

1- STEEL: ST-37
2-ALL BOLTS ARE GRADE: (8.8)
3- ø 12 HOLES (○) ø 22 HOLES (⊕)
ø 13 HOLES (⊖) ø 24 HOLES (⊕)
ø 14 HOLES (⊕) ø 28 HOLES (⊕)
ø 15 HOLES (⊙) ø 30 HOLES (⊕)
ø 18 HOLES (⊕) ø 35 HOLES (⊕)
MECHANISM AXES (⊕)
4- EARTHING HOLES (✱)
(ALL THE HOLES ARE ø14 EXCEPT AS SHOWN)
5- FOR ALL WELDS "D"=6mm EXECEPT AS SHOWN. D

## KEY PLAN

| REV. | DATE | DESCRIPTION | DESIGN | DRAWN | CHECKED | APPROVED |
|---|---|---|---|---|---|---|
| 03 | 05/2026 | ACC TO COMMENT | A.SH | A.B | R.KH | M.DA |
| 02 | 04/2026 | ACC TO COMMENT | A.SH | A.B | R.KH | M.DA |
| 01 | 02/2026 | ACC TO COMMENT | A.SH | A.B | R.KH | M.DA |
| 00 | 01/2026 | ISSUE FOR REVIEW | A.SH | A.B | R.KH | M.DA |

Client: NIEPCO
شرکت مهندسی و توسعه صنایع ملی مس ایران
Consultant: مونالکو ایران Monenco Iran
Contractor: MOHAM SHARGH CO.
Sub Contractor:

Project: 100MW Solar Power Plant (SARCHESHME )

Title: EQUIPMENT STRUCTURE DRAWING
DRAWING OF EQUIPMENT STRUCTURE 2NCT(P.TR.)

DOC NO.: 28P2-B-3MC-DWG-SUS-000000-CV-122
REV. 03

| SCALE | SIZE | SHEET | FORMAT |
|---|---|---|---|
| | | 29 OF 31 | DWG |

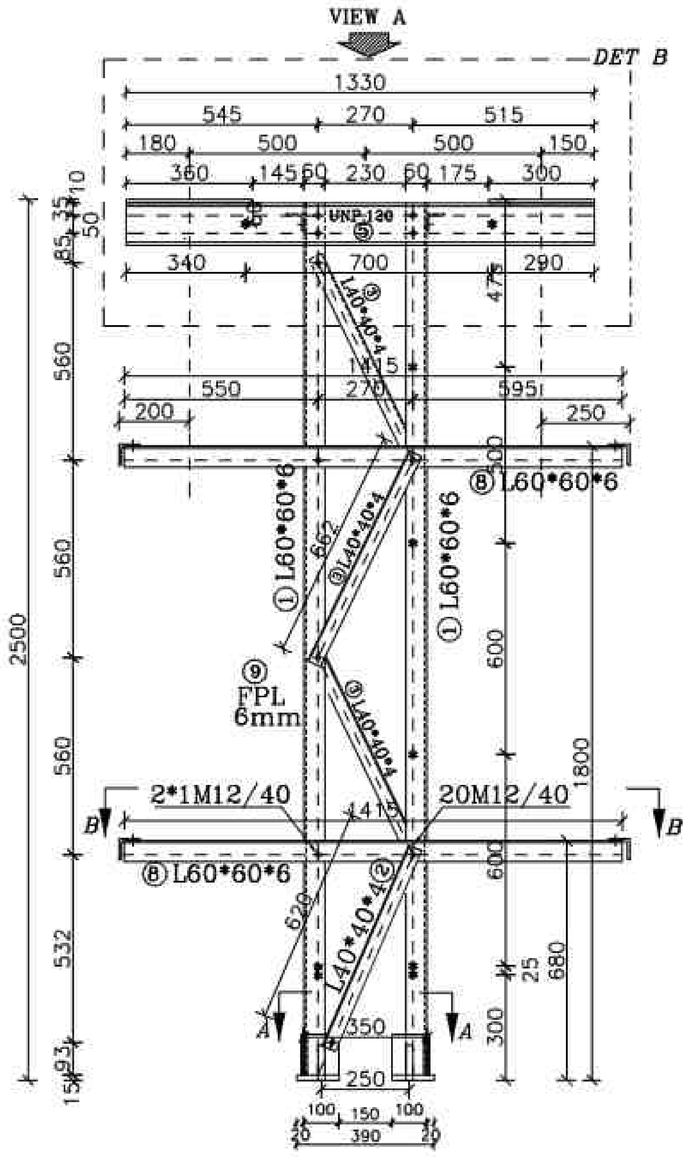


VIEW "B"
SC:1/25

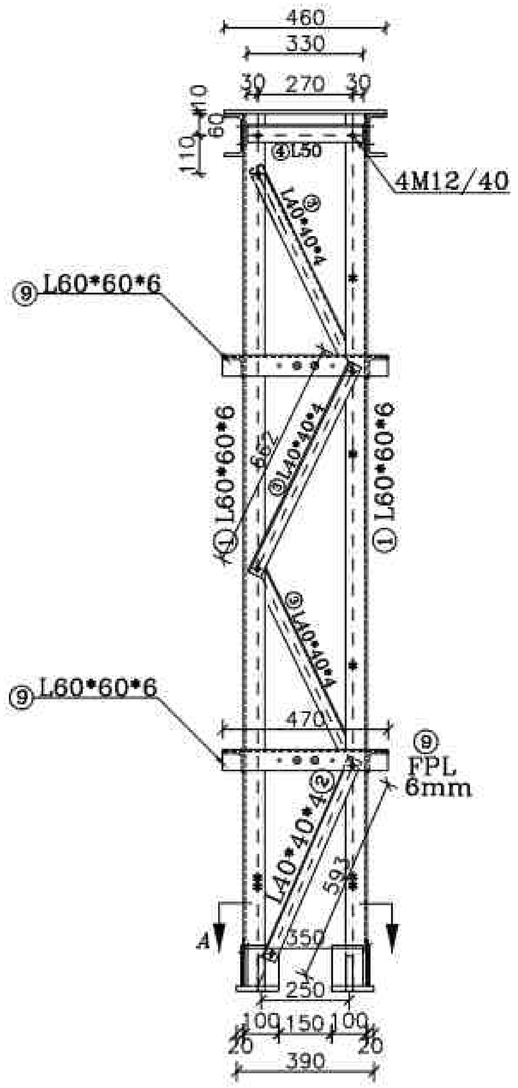


VIEW "C"
SC:1/25

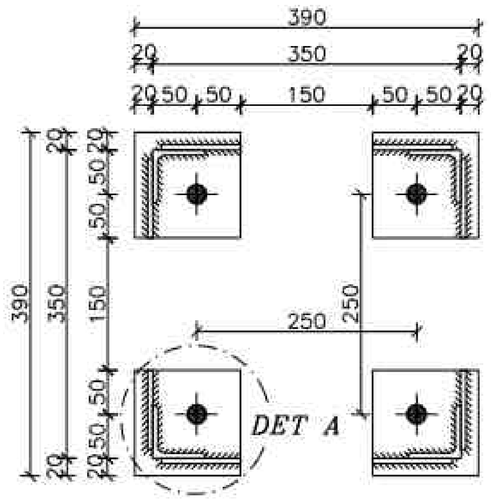


SEC "A-A"
SC:1/10

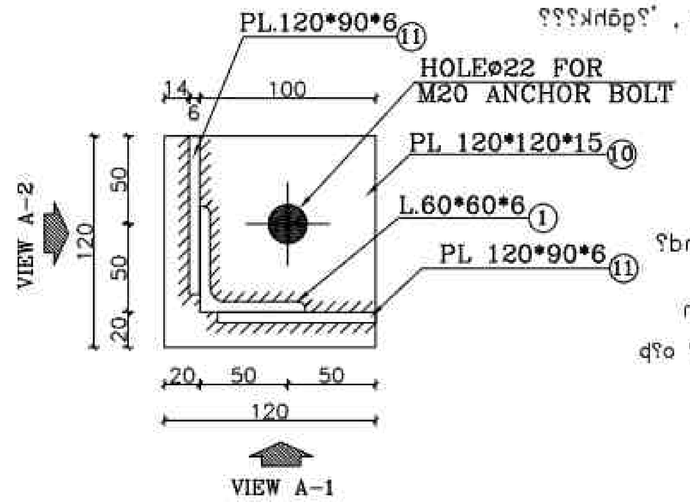


DET "A"
SC:1/5

SUPPORT 33SNCT
NO:2

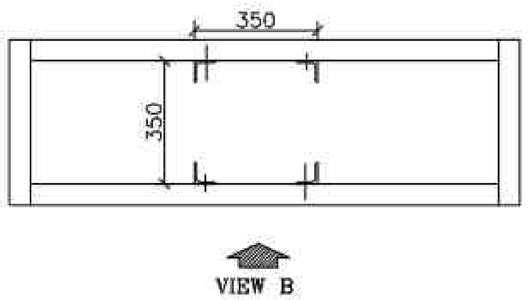


PLAN OF LEGS THAT SHOULD BE
PUNCHED FOR EARTHING HOLES

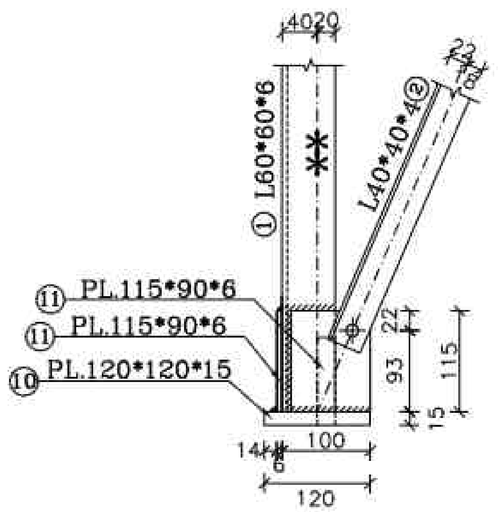


VIEW A-1
SC:1/10

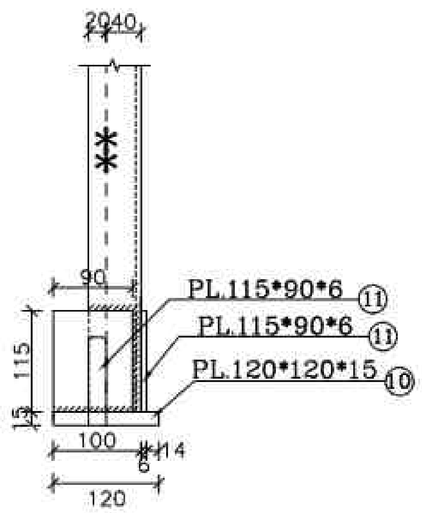


VIEW A-2
SC:1/10

## REFERENCE

| REFERENCE. TITLE | REFERENCE. No. |
|---|---|
| | |
| | |
| | |
| | |

## NOTES

1- STEEL: ST-37
2-ALL BOLTS ARE GRADE: (8.8)
3- ⌀ 12 HOLES (○) ⌀ 22 HOLES (✚)
⌀ 13 HOLES (⊖) ⌀ 24 HOLES (✚)
⌀ 14 HOLES (✚) ⌀ 28 HOLES (✚)
⌀ 15 HOLES (⊕) ⌀ 30 HOLES (✚)
⌀ 18 HOLES (✚) ⌀ 35 HOLES (✚)
MECHANISM AXES (✚)
**4- EARTHING HOLES (✱)**
(ALL THE HOLES ARE ⌀14 EXCEPT AS SHOWN)
5- FOR ALL WELDS "D"=6mm EXECEPT AS SHOWN.

## LEGEND

## KEY PLAN

| REV. | DATE | DESCRIPTION | DESIGN | DRAWN | CHECKED | APPROVED |
|---|---|---|---|---|---|---|
| 03 | 05/2026 | ACC TO COMMENT | A.SH | A.B | R.KH | M.DA |
| 02 | 04/2026 | ACC TO COMMENT | A.SH | A.B | R.KH | M.DA |
| 01 | 02/2026 | ACC TO COMMENT | A.SH | A.B | R.KH | M.DA |
| 00 | 01/2026 | ISSUE FOR REVIEW | A.SH | A.B | R.KH | M.DA |

Client:
Consultant: Monenco Iran
Contractor: MOHAM SHARGH CO.
Sub Contractor:

Project: 100MW Solar Power Plant (SARCHESHME)

Title: EQUIPMENT STRUCTURE DRAWING
DRAWING OF EQUIPMENT STRUCTURE 33SNCT

| DOC NO.: | 28P2-B-3MG-DWG-SUS-000000-CV-122 | REV. 03 |
|---|---|---|

| SCALE | SIZE | SHEET | FORMAT |
|---|---|---|---|
| | | 30 OF 31 | DWG |

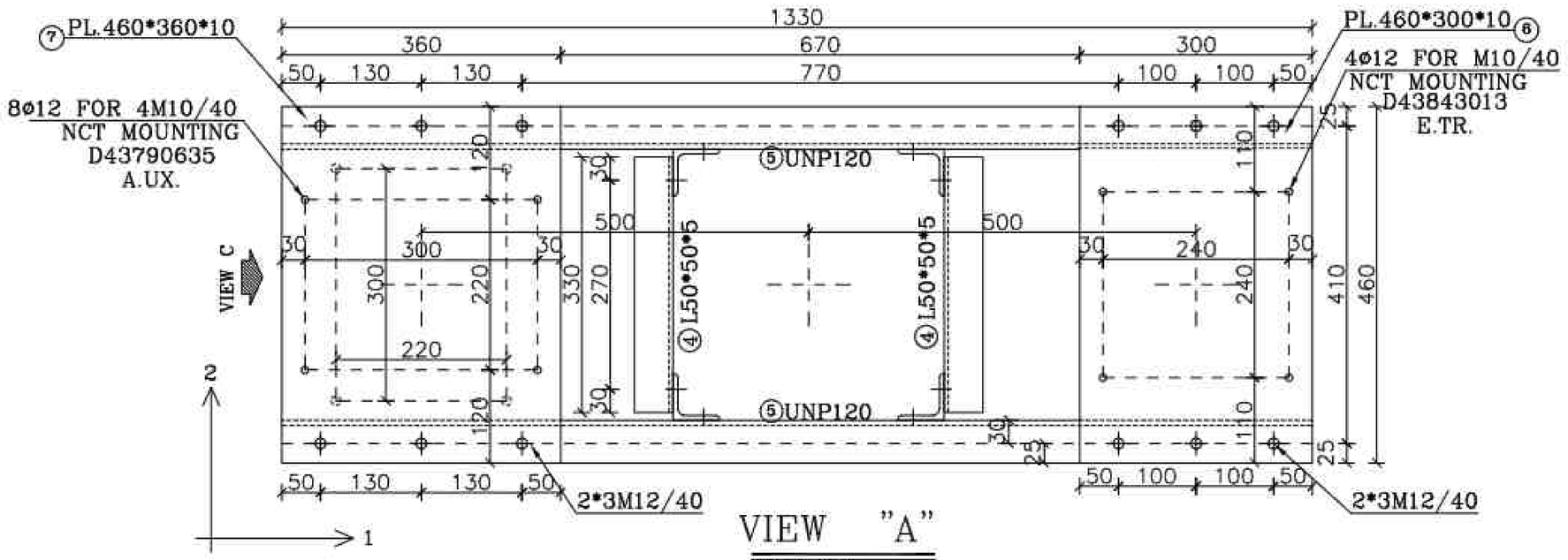


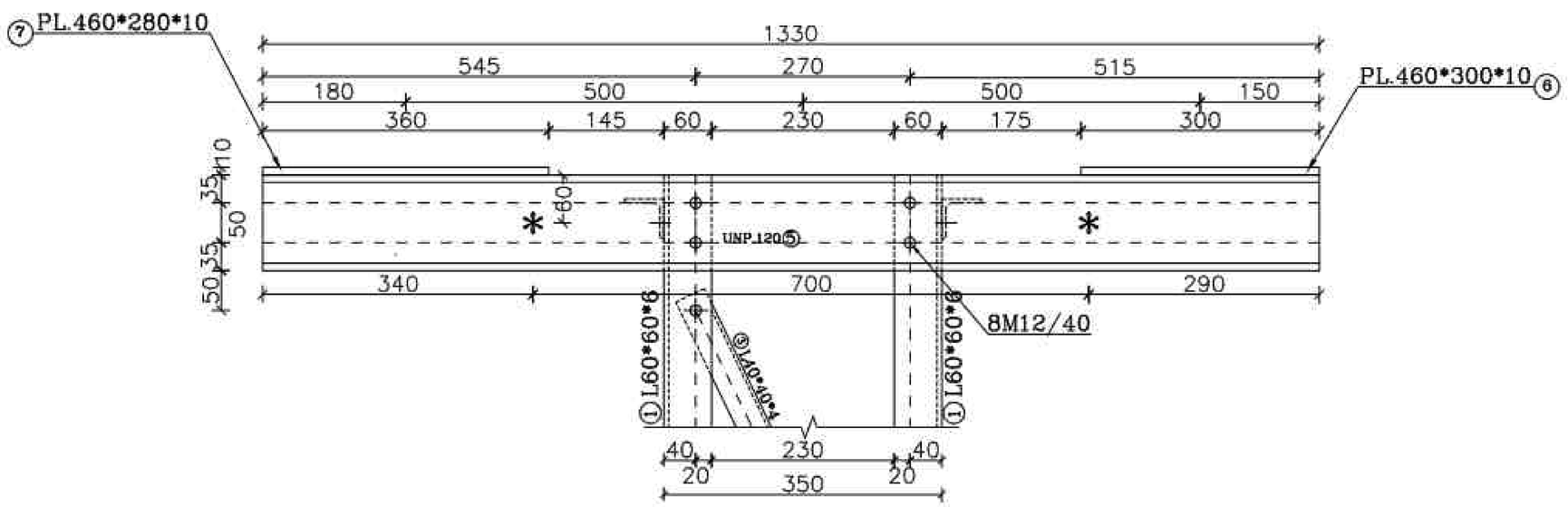


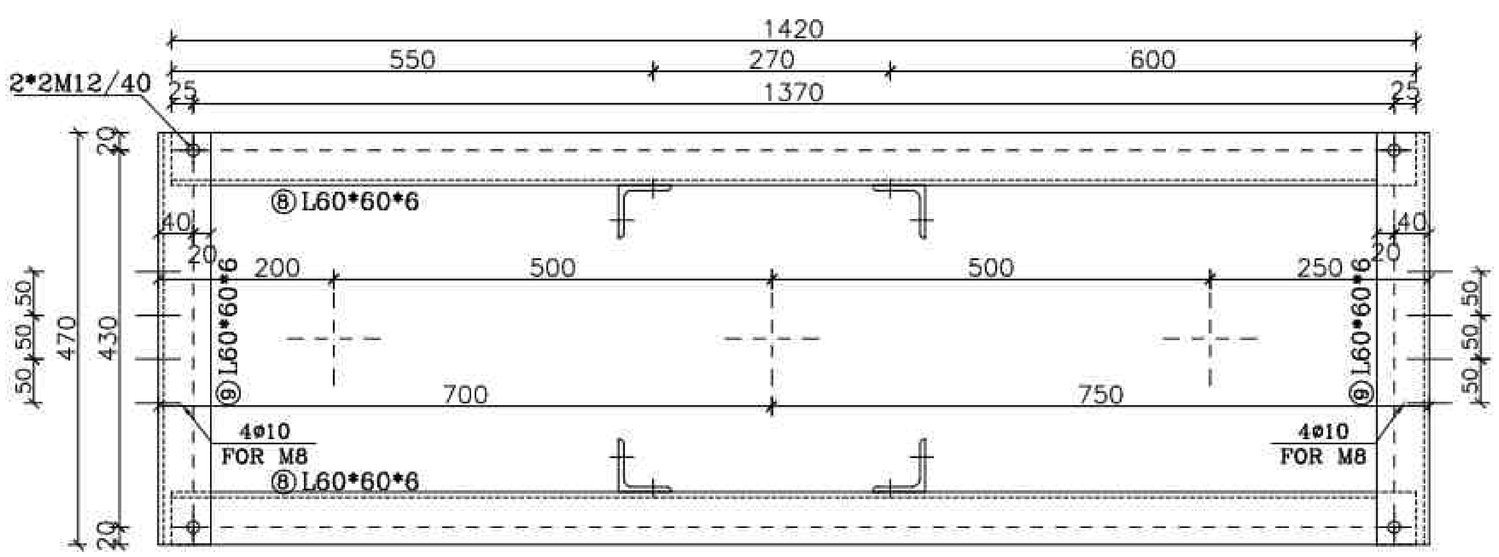


## BOLT LIST

| SIZE | QUANTITY) | SET | TOTAL |
|---|---|---|---|
| M12/40 | 50 | 2 | 100 |

## BOLT LIST EQUIPMNT

| SIZE | QUANTITY) | SET | TOTAL |
|---|---|---|---|
| M10/70 | 8 | 2 | 16 |

## LISTOFFER STRUCTURE

| POS | SIZE (mm) | Length (m) | QTY PCS | Weight(kg) kg/m | Piece | Total |
|---|---|---|---|---|---|---|
| 1 | L 60x60x6 | 2.475 | 4 | 5.42 | 13.41 | 53.66 |
| 2 | L 40x40x4 | 0.620 | 4 | 2.42 | 1.50 | 6.00 |
| 3 | L 40x40x4 | 0.662 | 12 | 2.42 | 1.60 | 19.22 |
| 4 | L 50x50x5 | 0.330 | 2 | 3.77 | 1.24 | 2.49 |
| 5 | UNP120 | 1.330 | 2 | 13.40 | 17.82 | 35.64 |
| 6 | PL: 460x300x10 | ------- | 1 | ------- | 10.833 | 10.833 |
| 7 | PL: 460x360x10 | ------- | 1 | ------- | 13.000 | 13.000 |
| 8 | L 60x60x6 | 1.415 | 2 | 5.42 | 7.67 | 15.34 |
| 9 | L 60x60x6 | 0.470 | 2 | 5.42 | 2.55 | 5.09 |
| 10 | PL: 120x120x15 | ------- | 4 | ------- | 1.696 | 6.782 |
| 11 | PL: 115x90x6 | ------- | 8 | ------- | 0.487 | 3.900 |
| 12 | FPL: 50x50x6 | ------- | 8 | ------- | 0.118 | 0.942 |
| ST-37-2(DIN 17100) | | Total Weight/For Structure | | | 172.91 | |
| SET SITE | | | 2 | | | |
| HOT DIP GALVANIZED | | Total Weight/For project | | | 345.81 | |

این جدول فهرست مصالح و آهن آلات بیوده و جنبه اجرایی ندارد و مقادیر مبنی بایست مجدداً توسط سازنده کنترل شود

## REFERENCE

| REFERENCE. TITLE | REFERENCE. No. |
|---|---|
| | |
| | |
| | |
| | |

## NOTES

1- ASTM A123,A153

2- D43843013, D43790635

3- 8.8

4- 150 / 90 / 80

5- 85 / 70 / 55

## LEGEND

1- STEEL: ST-37
2-ALL BOLTS ARE GRADE: (8.8)
3- ø 12 HOLES (○) ø 22 HOLES
ø 13 HOLES (⊖) ø 24 HOLES
ø 14 HOLES ø 28 HOLES
ø 15 HOLES (⊘) ø 30 HOLES
ø 18 HOLES ø 35 HOLES
MECHANISM AXES
4- EARTHING HOLES (✱)
(ALL THE HOLES ARE ø14 EXCEPT AS SHOWN)
5- FOR ALL WELDS "D"=6mm EXECEPT AS SHOWN.

## KEY PLAN

| REV. | DATE | DESCRIPTION | DESIGN | DRAWN | CHECKED | APPROVED |
|---|---|---|---|---|---|---|
| 03 | 05/2026 | ACC TO COMMENT | A.SH | A.B | R.KH | M.DA |
| 02 | 04/2026 | ACC TO COMMENT | A.SH | A.B | R.KH | M.DA |
| 01 | 02/2026 | ACC TO COMMENT | A.SH | A.B | R.KH | M.DA |
| 00 | 01/2026 | ISSUE FOR REVIEW | A.SH | A.B | R.KH | M.DA |

Client: NIGEC

Consultant: Monenco Iran

Contractor: MOHAM SHARGH CO.

Sub Contractor:

Project: 100MW Solar Power Plant (SARCHESHME)

Title: EQUIPMENT STRUCTURE DRAWING
DRAWING OF EQUIPMENT
STRUCTURE 33SNCT

DOC NO.: 28P2-B-3MC-DWG-SUS-000000-CV-122

REV. 03

| SCALE | SIZE | SHEET | FORMAT |
|---|---|---|---|
| | | 31 OF 31 | DWG |